Maestro 3
Maestro 3 ecoLine
Maestro 3 Magic
Maestro 3 cooking section

Exploded view

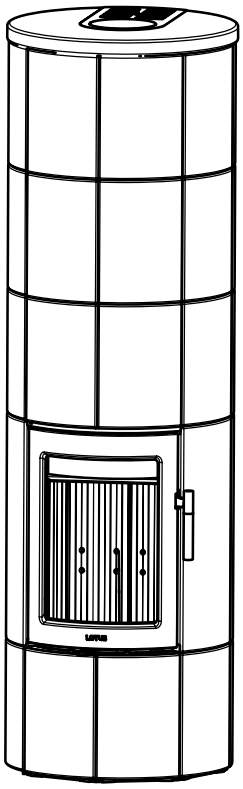

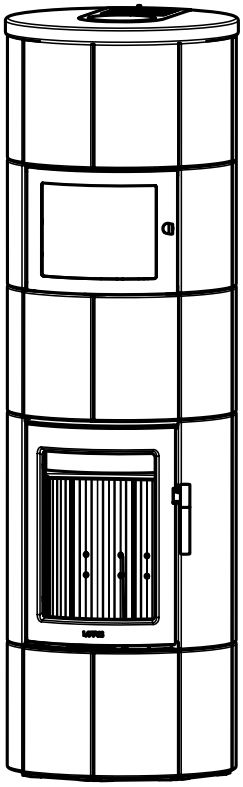

Maestro 3

Pos	Number	Description	Qty
1	13209	Smoke deflector back	1
2	13210	Smoke deflector front	1
3	12121	Insulation left side	1
4	12122	Insulation left side back	1
5	12085	Insulation back left	1
6	12084	Insulation back right	1
7	12102	Insulation right side back	1
8	12101	Insulation right side	1
9	12034	Insulation bottom left	1
10	12037	Insulation bottom right	1

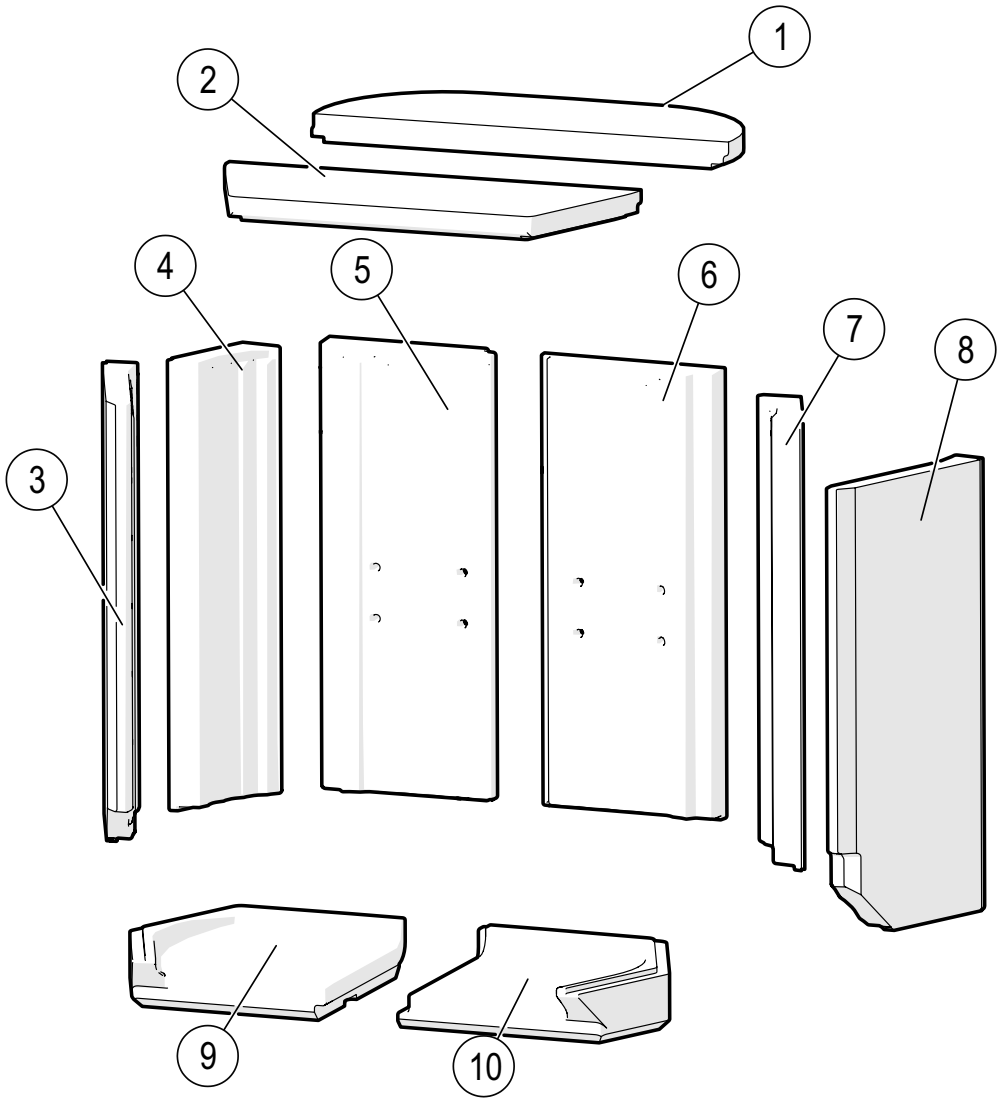

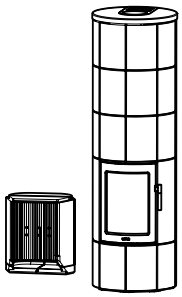

Maestro 3

Pos	Number	Description	Qty
1	11033	Welded part above the door	1
2	14023	Hex set screw M8x10 DIN914	4
3	13712	Button head screw M6x6 ISO7380	2
4	12247	Welded log stop	1
5	11952	Inner bottom	1
6	11751	Holder to damper handle	1
7	11169	Button head screw M5 x 8	2
8	13688	Skrue M3x8 ISO 7380	2
9	15960	Bottom element	1
10	13710	Button head screw M5x6 ISO7380 A2	2

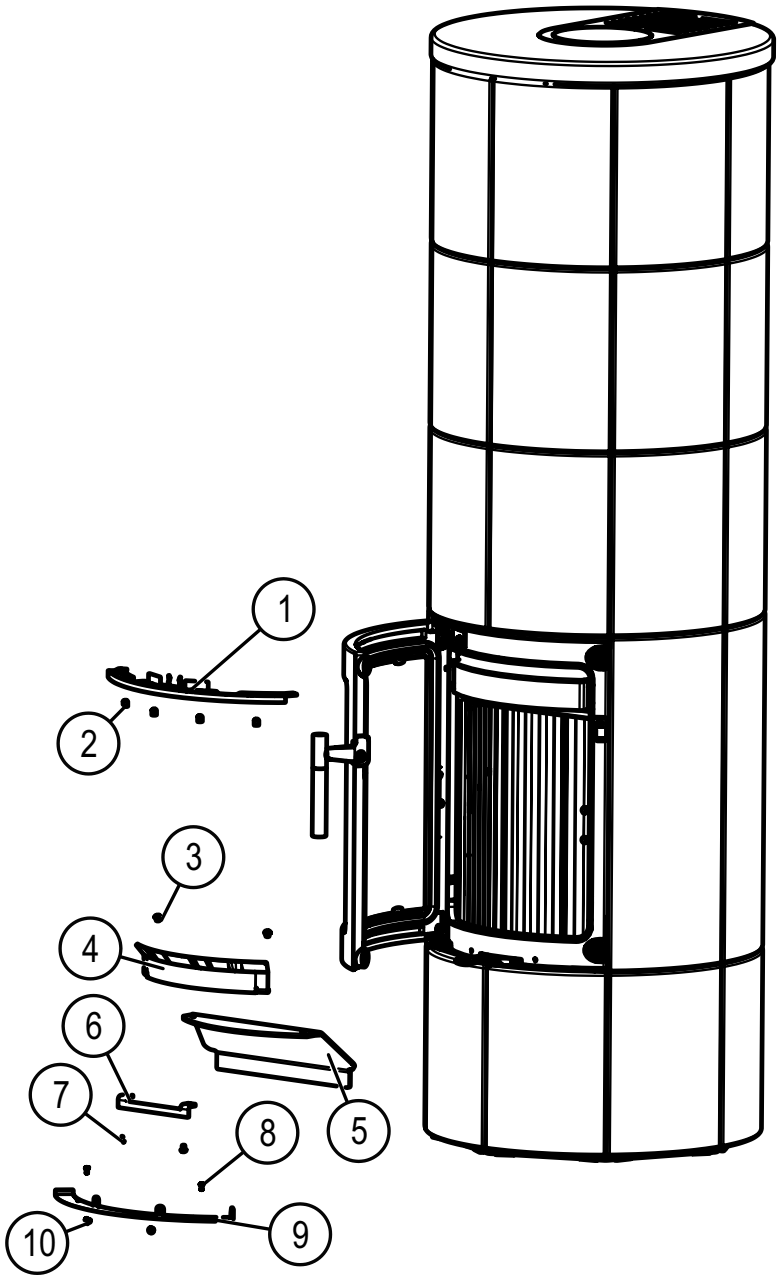

Maestro 3

Pos.	Number	Description	Qty
1	11605/11606*	Cover to handle for damper	1
2	13861	Damper plate	1
3	13864	Tube for air damper	1
4	12412	Bushing	1
5	14641	Socket head cap screw M5 x 20 DIN912	1
6	14639	Socket head cap screw M5 x 10 DIN912	1
7	13667	Washer 10 mm DIN125A	1
8	14298	Disc spring 20x10x0,6 DIN 2093	8
9	13766	Plain washer 6 mm DIN9021	1
10	13701	Buttonhead screw M5 x 12 ISO7380	1

*depends on colour/style

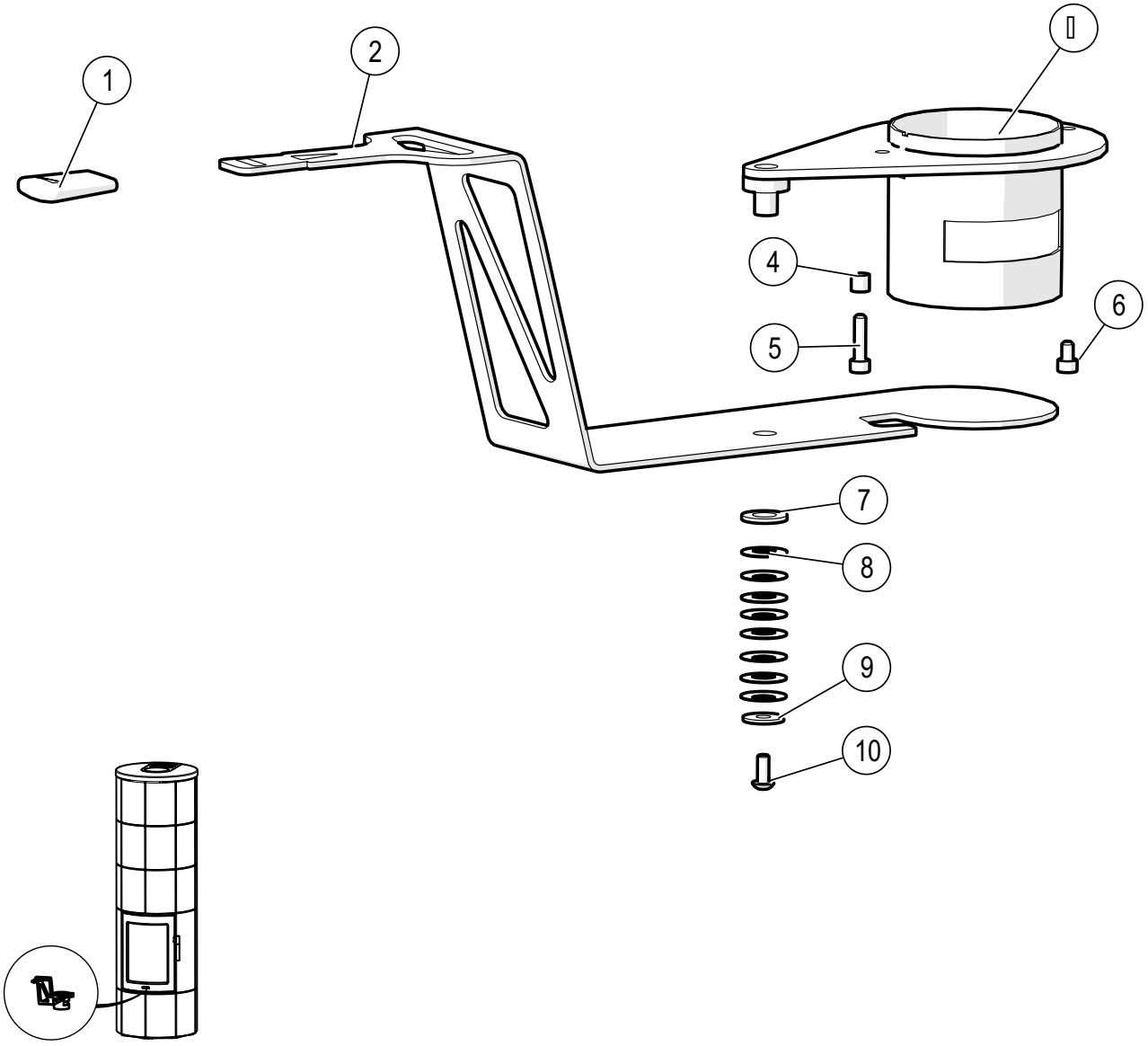

Maestro 3

Pos.	Number	Description	Qty
1	12755	Braided gasket	1
2	11169	Button head screw M5 x 8	4
3	13872	Glass holder	4
4	11391	Door glass	1
5	12818	Gasket with glue	1
6	13720	Button head screw M6x30 ISO7380	1
7	14297	Disc washer 16x8,2x0,40 DIN2093 A2	2
8	13992	Socket set screw M4x12 DIN913 H45	1
9	11914	Handle part	1
10	13995	Socket set screw M4x4 DIN913 H45	2
11	14906	Distance ring	1
12	11854	Handle	1
13	13729	Button head screw M8 x 25	1
14	10625/10626*	Handle	1
15	11974	Screw countersunk M5x10 DIN7991 A2	2
16	13685	Button head screw M3x10 ISO 7380	2
17	11144	Spring handle	1
18	14009	Socket set screw M5 x 6 DIN913	1
19	13694	Button head screw M4 x 6 ISO7380 10.9	1
20	10650	Spring plate for handle	1
21	12476	Door machined	1
22	14299	Disc spring 12.5x6,2x0,35	1
23	12475	Door stop	1
24	11968	Hex socket countersunk head screw M4x8 DIN7991	1
25	11161	Spring for door	1
26	11169	Button head screw M5 x 8	1
27	13673	Washer 5 mm DIN125A	1
28	12568	Magnet ø30 x 12	2

*depends on colour/style

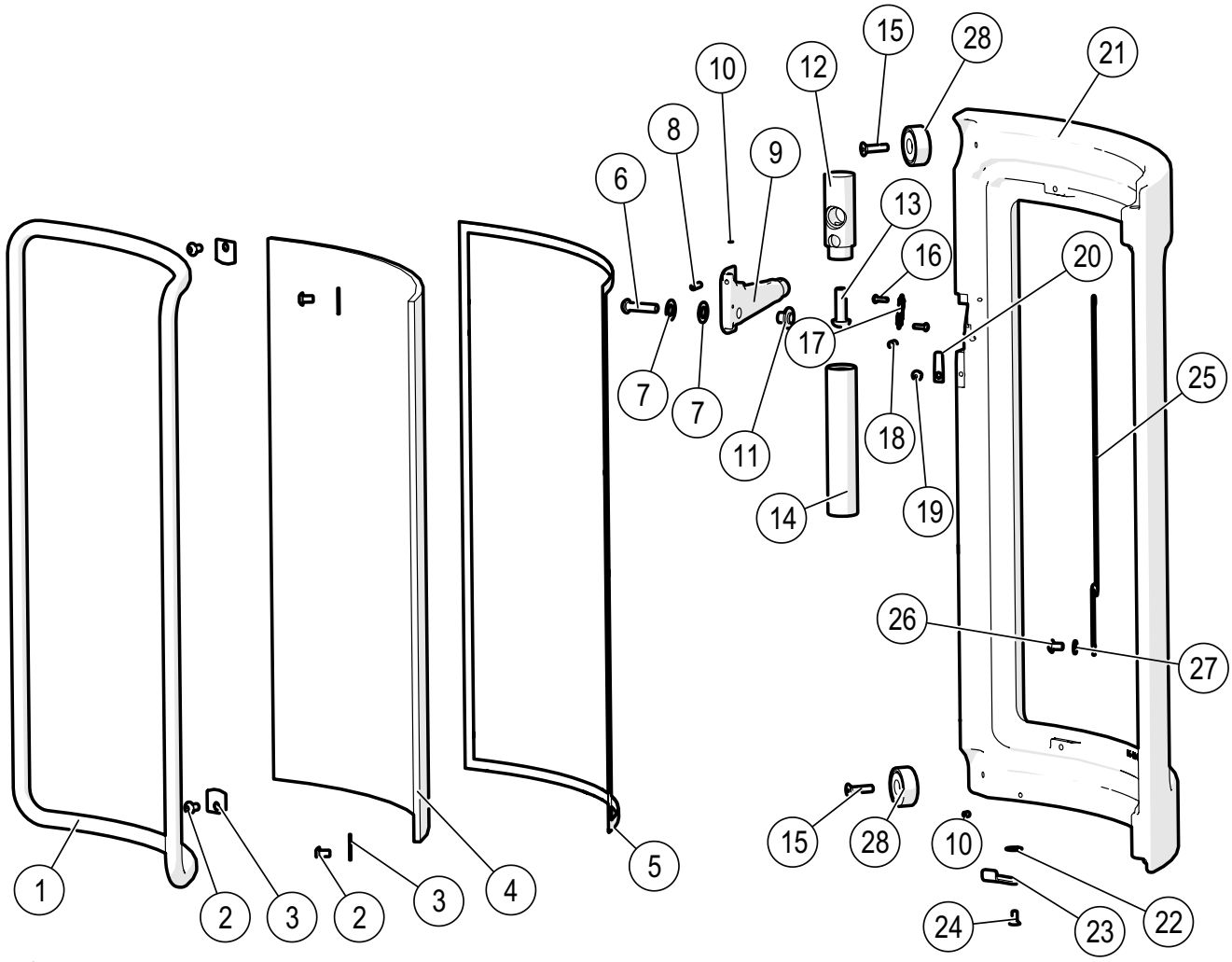

Maestro 3

Pos.	Number	Description	Qty
1	11822	Shaft for door	1
2	13996	Socket set screw M4 x 5 DIN913	2
3	11798	Hinge welded	1
4	13792	Screw black ripp M5 x 12 ISO 88913	4
5	13673	Washer 5 mm DIN125A	2
6	11832	Hinge shaft bottom	1
7	11169	Button head screw M5 x 8	1
8	11778	Hinge bottom	1
9	13736	Screw to magnet plate	2
10	12560	Magnet plate	2
11	14299	Disc spring 12.5x6,2x0,35	12
12	14563	Handle plate on stove	1
13	11169	Button head screw M5 x 8	1
14	13955	Adjustment screw	5

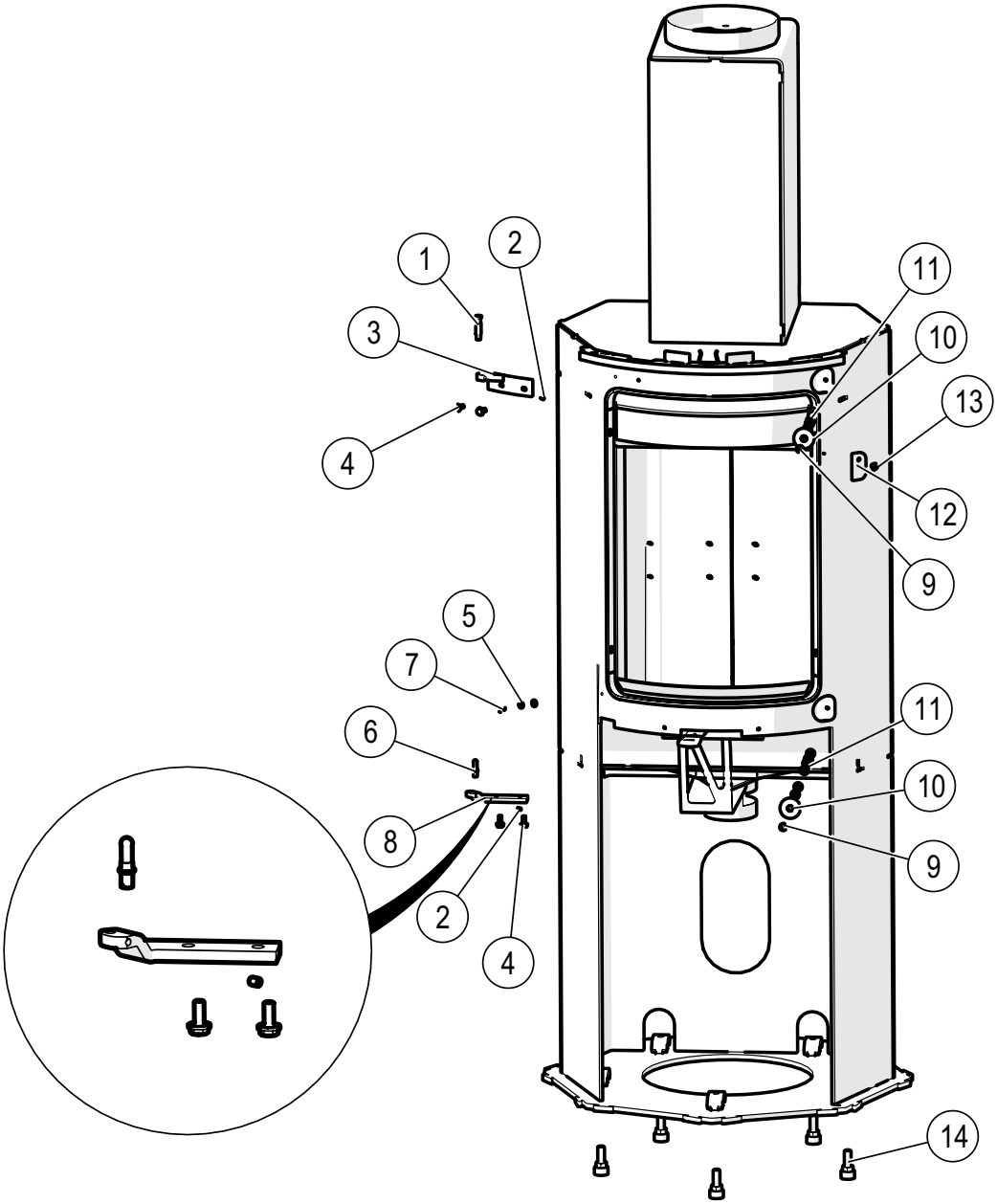

Maestro 3

Pos	Number	Description	Qty
1	01-504	Stone low	22
2	05-0020	Tall stone	6
3	01-506	Stone with air hole	2
4	10802	Angle bottom	7
5	14759	Fittings vertical	2
6	13302	Assemble bracket	18
7	14727	Angle left	1
8	11852	Angle right	1
9	14548	Top angle	9
10	13273	Assemble clips	27
11	14084	Guide ring	1

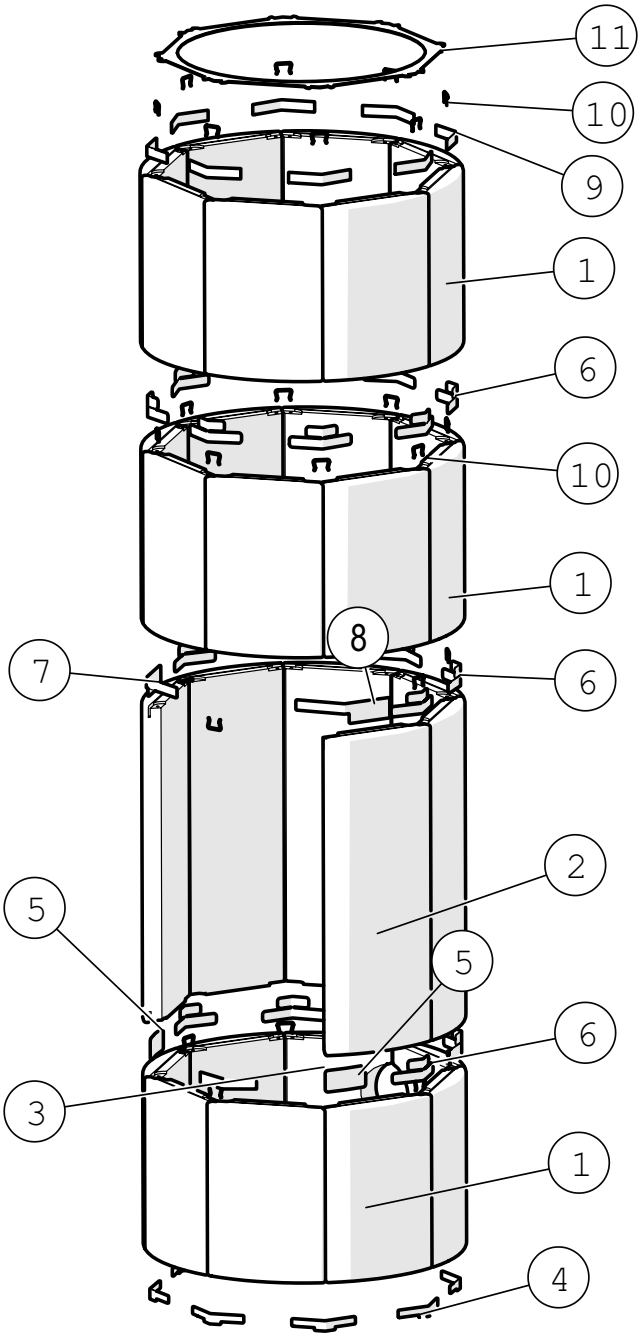

Maestro 3

Pos	Number	Description	Qty
1	10456/10457*	Assembled top grate	1
2	05-0165	Stone top plate	1
3	14203	Welded cover back bottom	1

*depends on colour/style

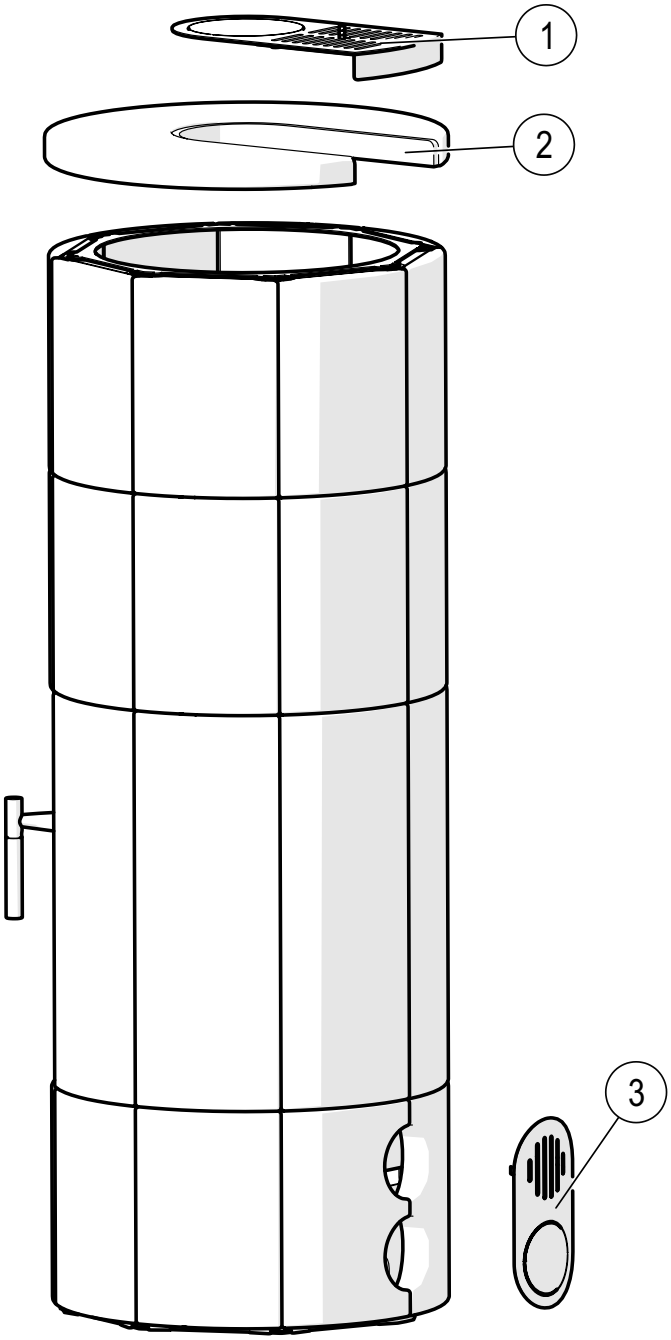

Maestro 3

Pos	Number	Description	Qty
1	01-514	Weight stone	10

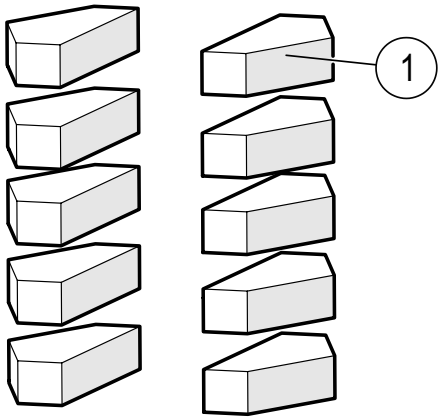

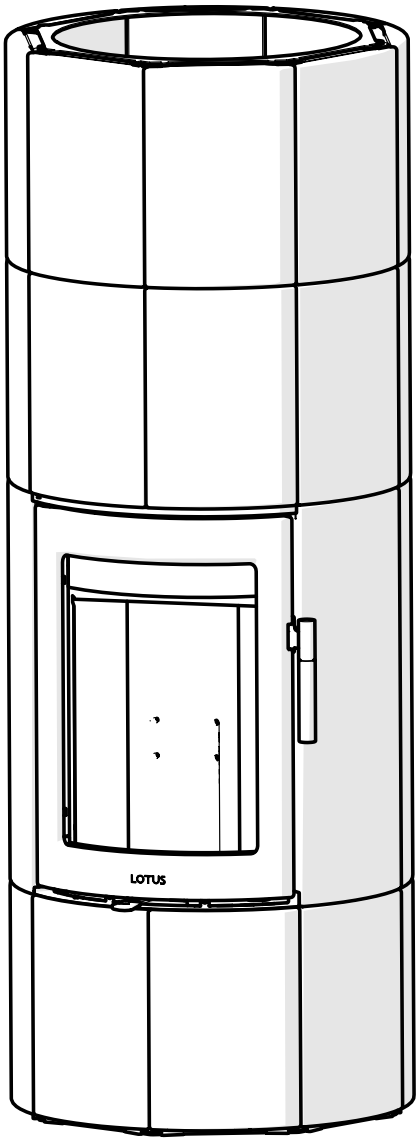

Maestro 3 ecoLine

Pos	Number	Description	Qty
1	16484	Catalyst 240x165x18	1

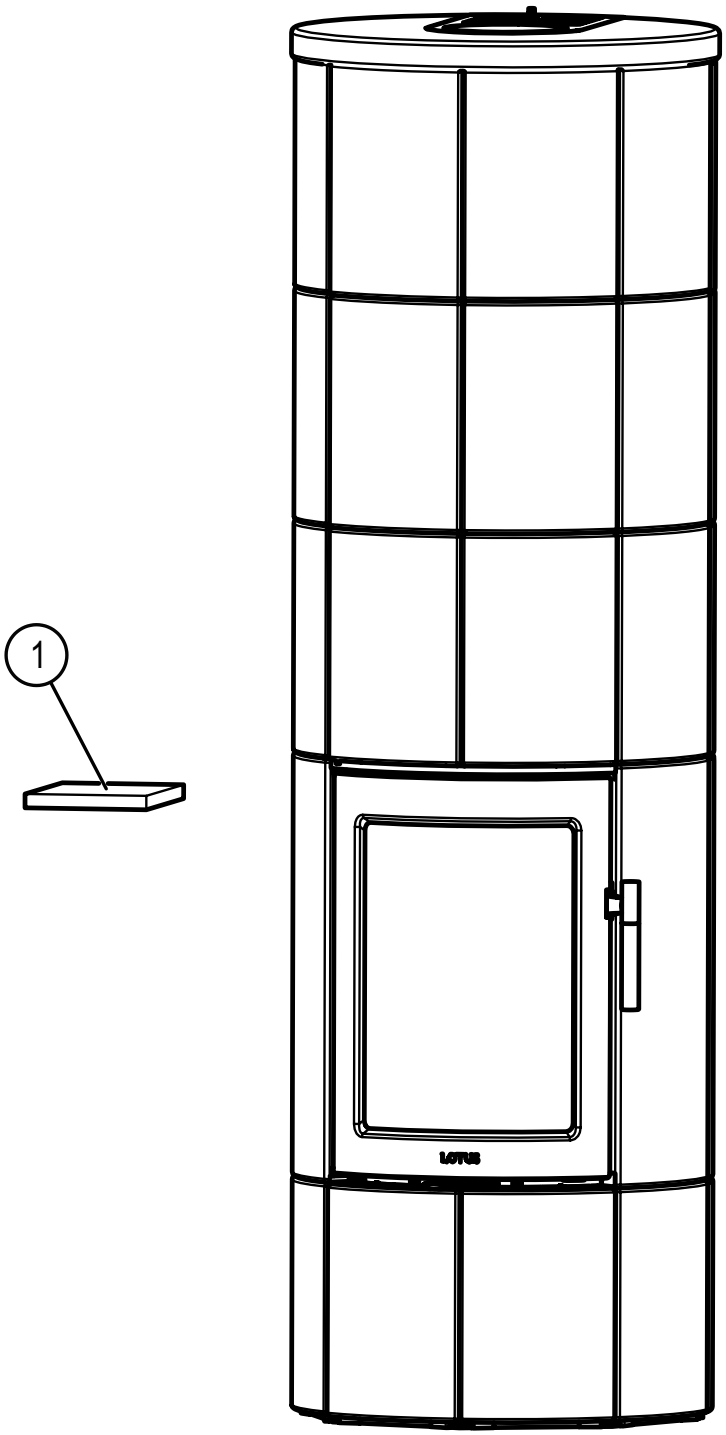

Maestro 3 Magic

Pos.	Number	Description	Qty
1	13694	Button head screw M4 x 6 ISO7380	6
2	11469	Upper glass support on door	1
3	11392	Glass outside	1
4	11539	Bottom glass support on door	1
5	12798	Rope seal 14mm	1
6	12818	Gasket 6mm with glue	1
7	12477	Door machined	1
8	11161	Closing spring for door	1
9	13673	Washer M5 DIN125A	1
10	11169	Button head screw M5 x 8	5
11	12945	Shims washer	2
12	12568	Magnet ø30 x 12	2
13	11974	Screw countersunk M5x10 DIN7991 A2	2
14	12475	Door stop	1
15	13995	Socket set screw M4x4 DIN913 H45	1
16	14299	Disc spring 12.5x6,2x0,35	1
17	11961	Hex countersunk screw M4x10 DIN7991	1
18	11391	Door glass	1
19	13872	Glass holder	4
20	12755	Rope seal 12mm	1
21	11854	Handle	1
22	13729	Button head screw M8 x 25	1
23	10625/10626*	Soft grip to handle	1
25	13720	Button head screw M6x30 ISO7380	1
26	14297	Disc washer 16x8,2x0,40 DIN2093 A2	1
27	10650	Spring plate for handle	1
28	B-360405	Button head screw M4 x 5 ISO7380 10.9	1
29	14906	Distance ring	1
30	13685	Button head screw M3x10 ISO 7380	2
31	11144	Spring	1
32	14009	Socket set screw M5 x 6 DIN913	1

*depends on colour/style

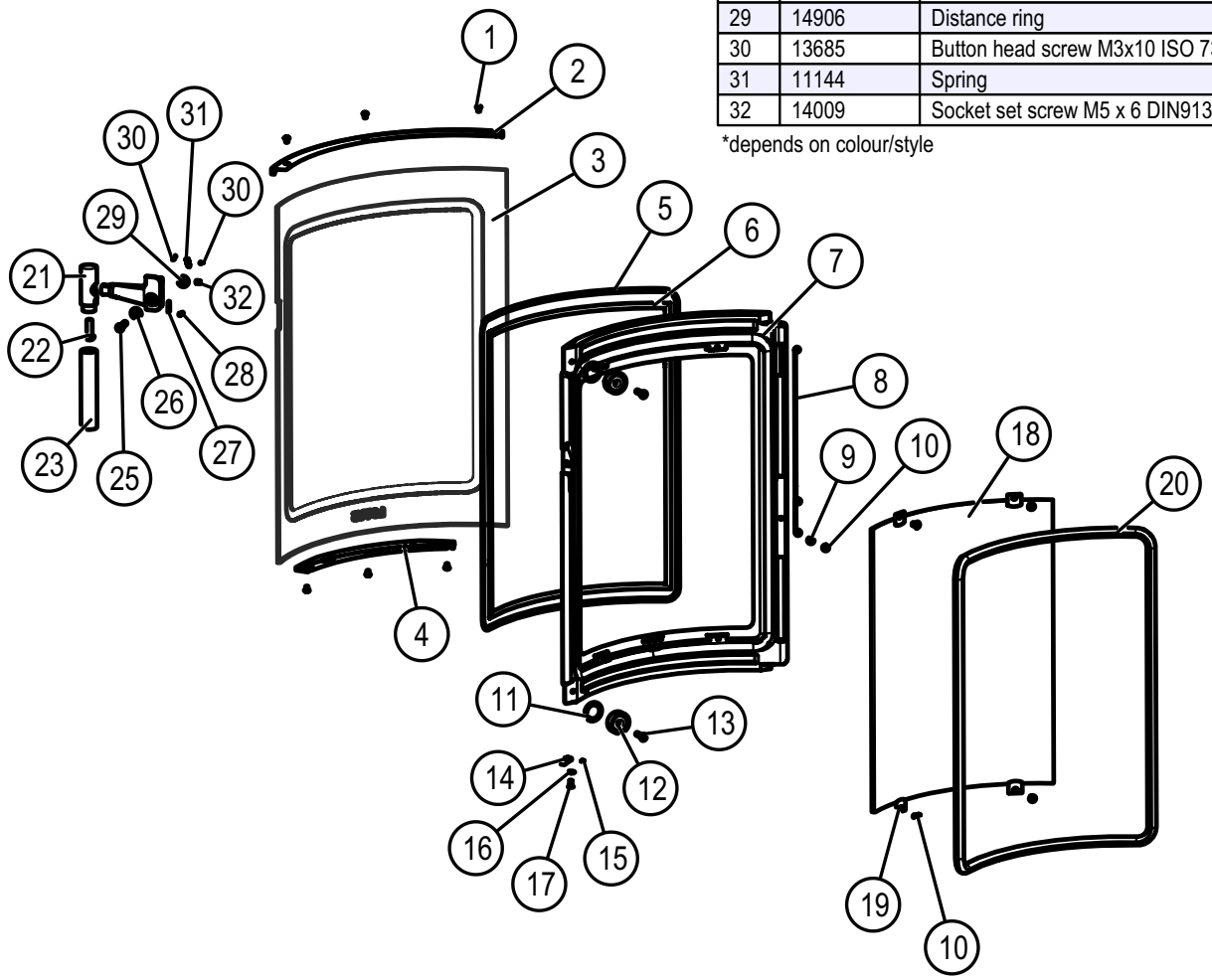

Maestro 3
Cooking section

Pos.	Number	Description	Qty
1	12480	Door, cooking section, assembled	1
2	11991	Hex countersunk screw M5x8 DIN7991	2
3	12453	Lit for assemblyhole	1
4	12818	Gasket, Ø6 adhesive	1
5	12177	Handle for deflectorplate	1
6	11608	Rubber bushing	1
7	11831	Hinge shaft	2
8	11168	Button head screw M5 x 6 ISO7380 8.8	4
9	11774	Hinge plate	2
10	12794	Gasket 10mm with glue	1
11	14870	Cover welded	1
12	01-588	Soapstone left side in cooking section	1
13	01-590	Soapstone backside in cooking section	2
14	01-586	Soapstone side in cooking section	1
15	01-584	Soapstone bottom left in cooking section	1
16	01-582	Soaptsone bottom right in cooking section	1

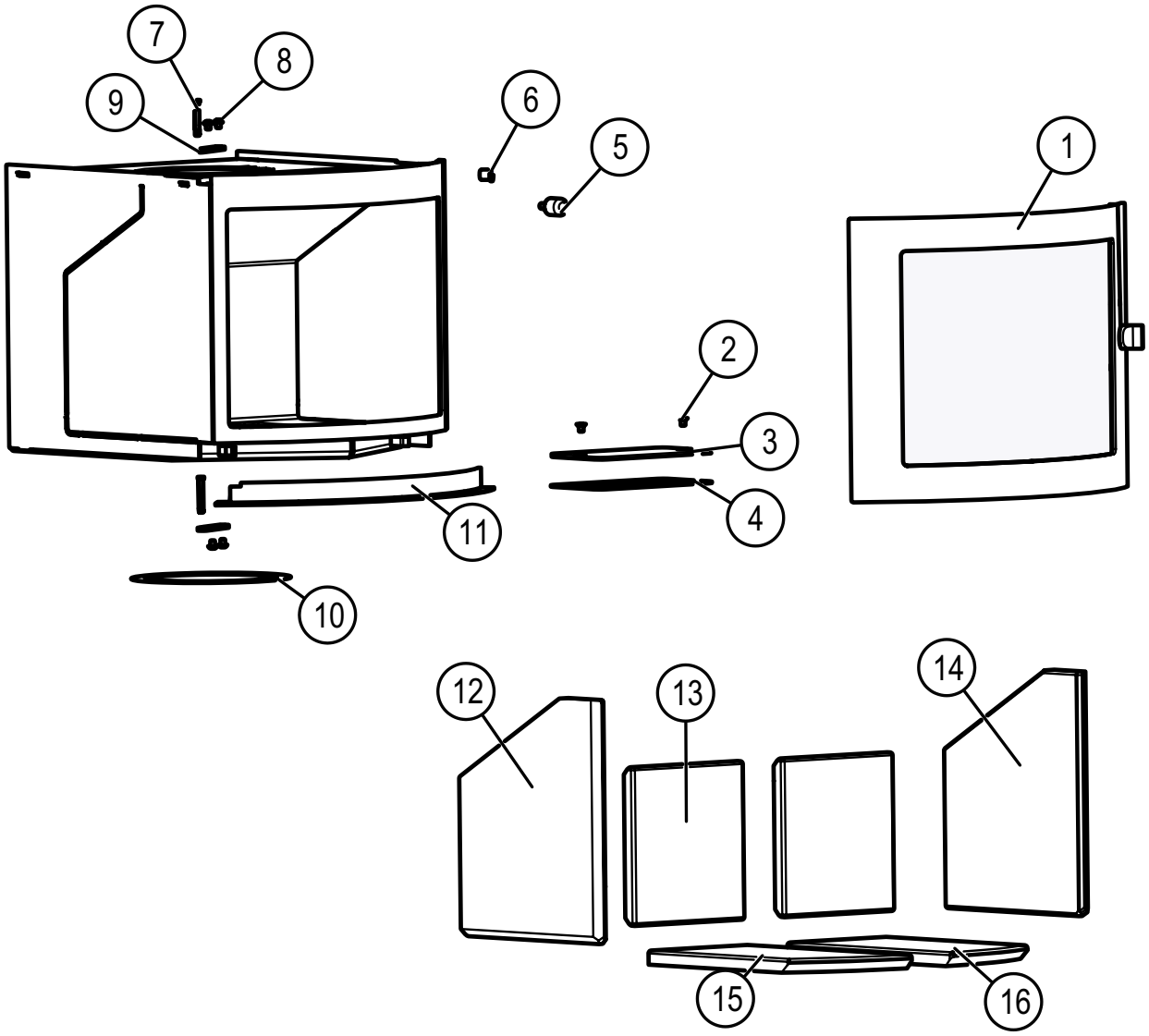

Maestro 3
Cooking section
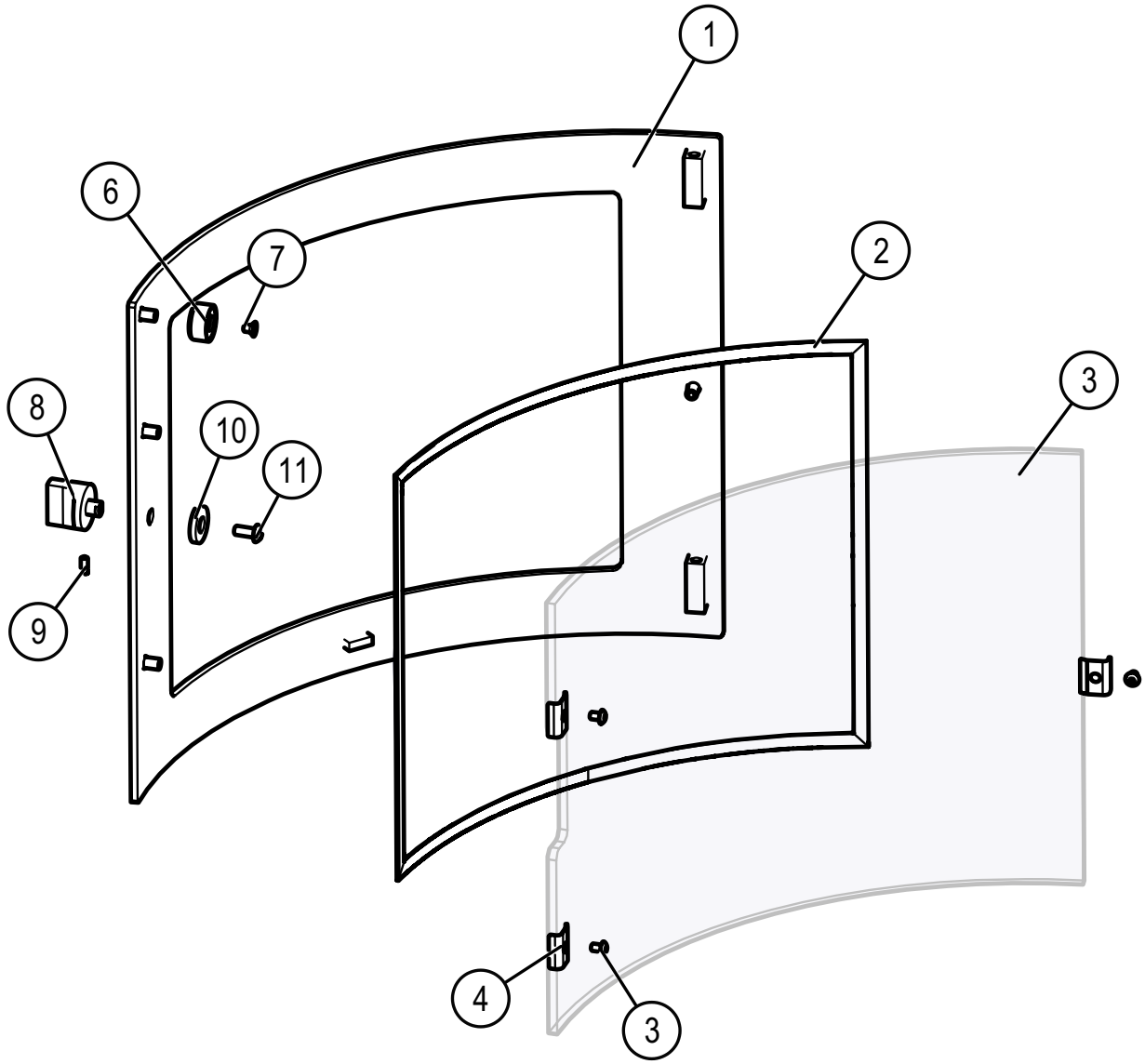
Pos.	Number	Description	Qty
1	165	Door welded to cooking section	1
2	P-110006	Rope seal	1
3	01-404	Glass for cooking section	1
4	01-0007	Glass holder	3
6	div-102010	Magnet ø20 x 10	1
7	B-300406	Screw countersunk M4x6 DIN7991 8.8	1
8	01-322	Handle	1
9	B-340405	Socket set screw M4x10 DIN914	1
10	01-0015	Wasker 20x8,2x3,5mm.	1
11	B-360512	Buttonhead screw M5 x 12 ISO7380	1