Lotus · Inserts

H370 - H470 - H570
H470W - H570W
H700

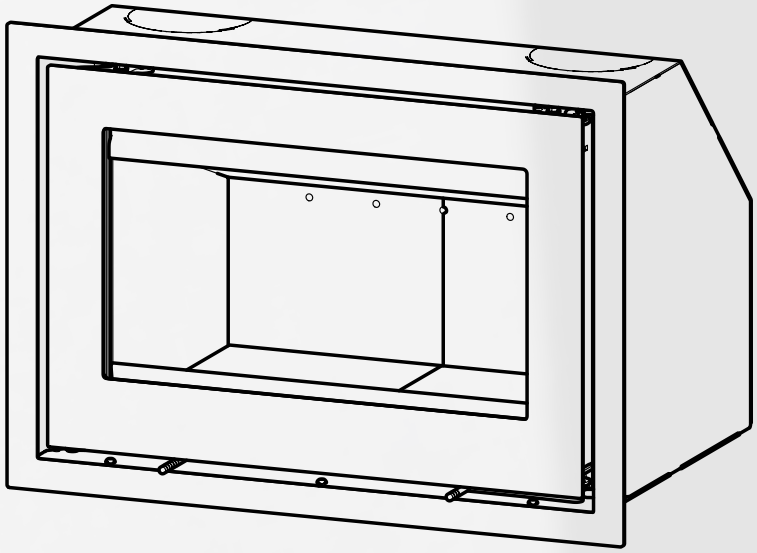

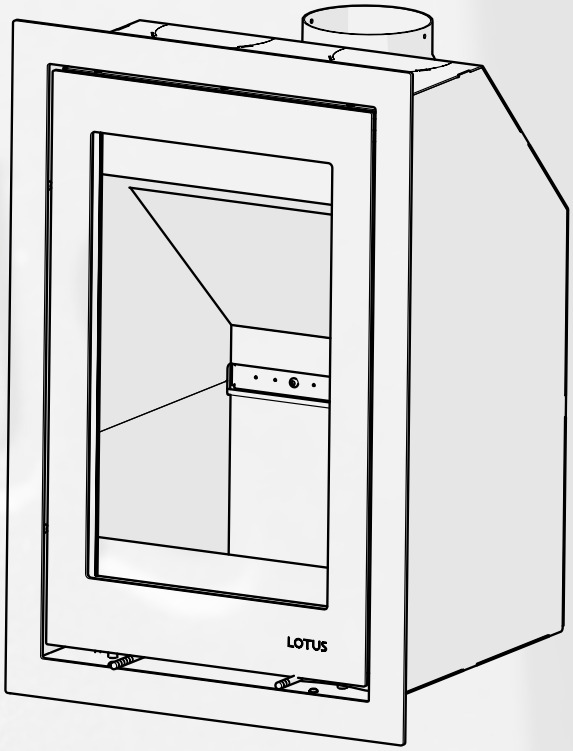

LOTUS
www.lotusstoves.com

47006 14709

Version 2 20.02.2025

LOTUS
www.lotusstoves.com

H370-H470-H570-H470W-H570W

1

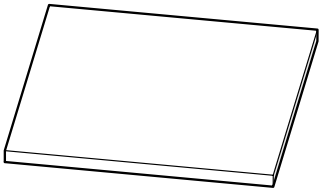

4x 14665

2

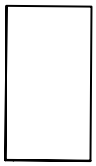

4x 14934

3

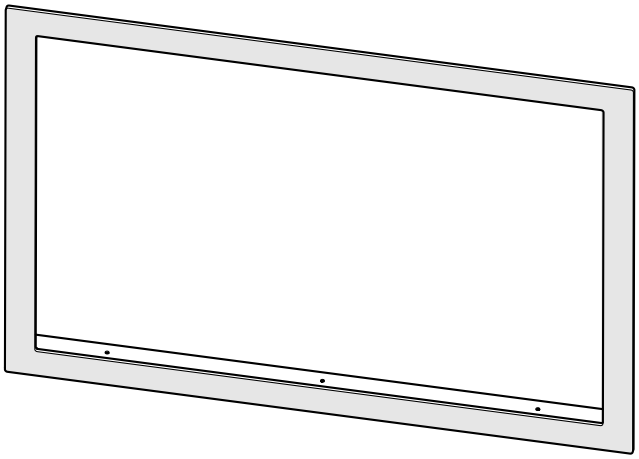

1x 16979 H370-H470
1x 11274 H470W
1x 13887 H570
1x 13889 H570W

4

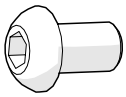

6x 11169 H370-H470-H570
8x 11169 H470W-570W
8x 11168 H700

5

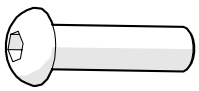

4x 13730

6

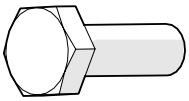

4x 10663

7

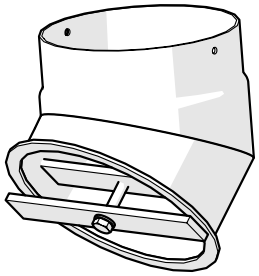

1x 12186

+

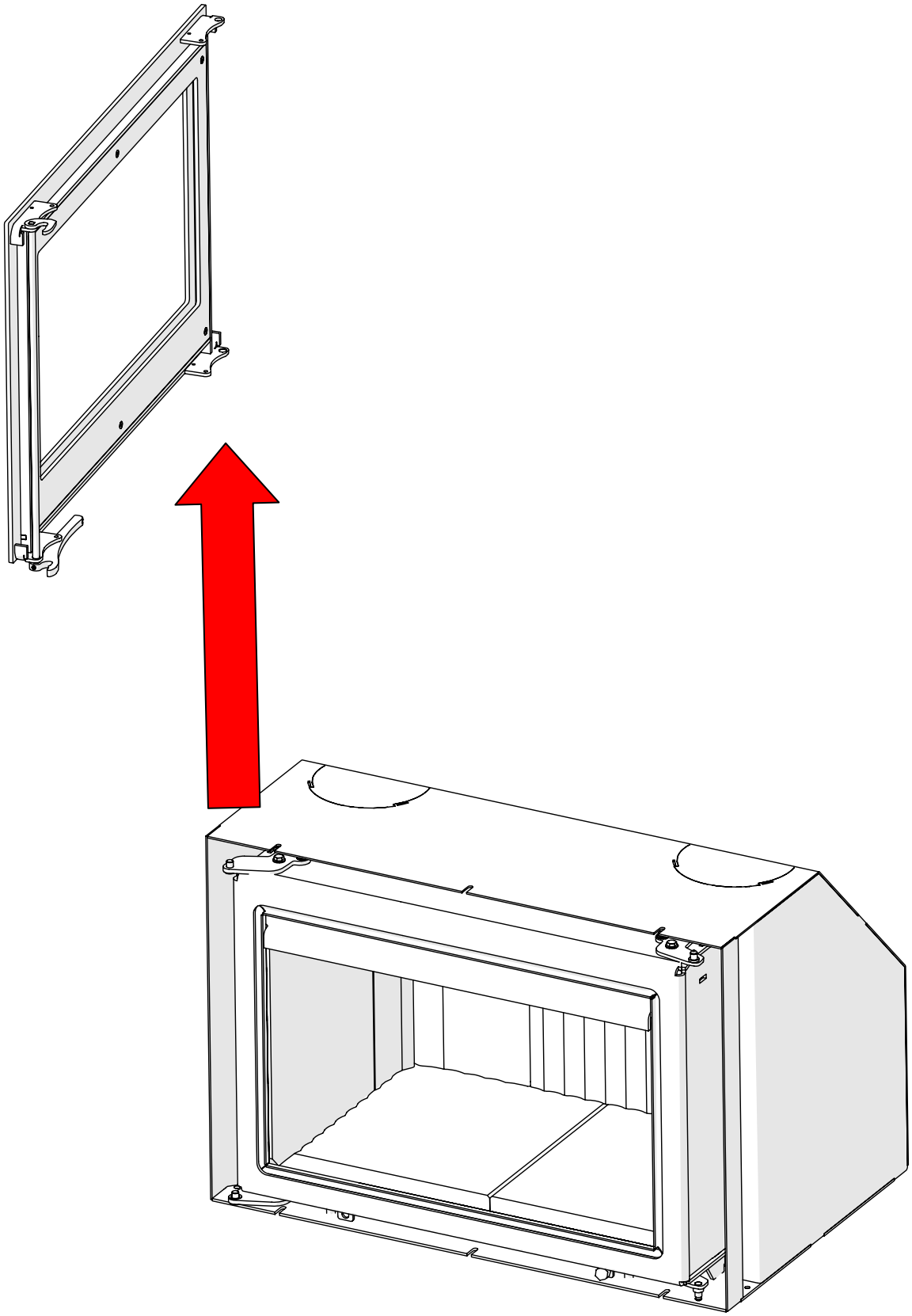

H370 - H470 - H570

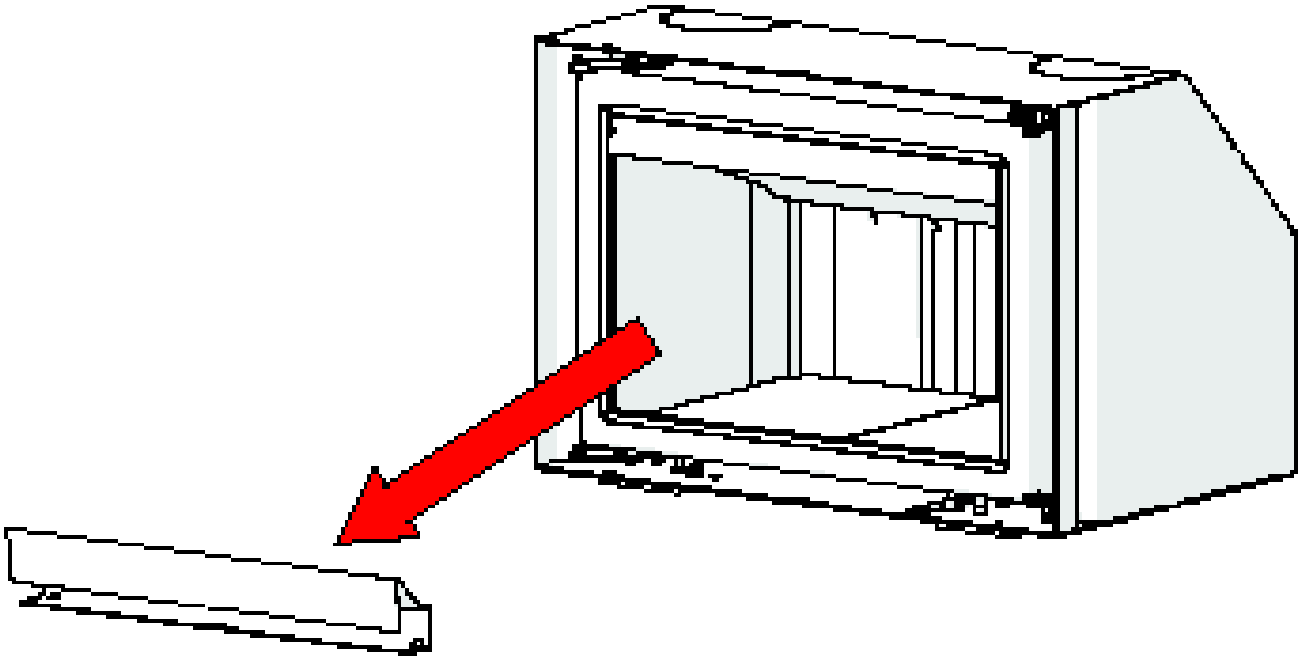

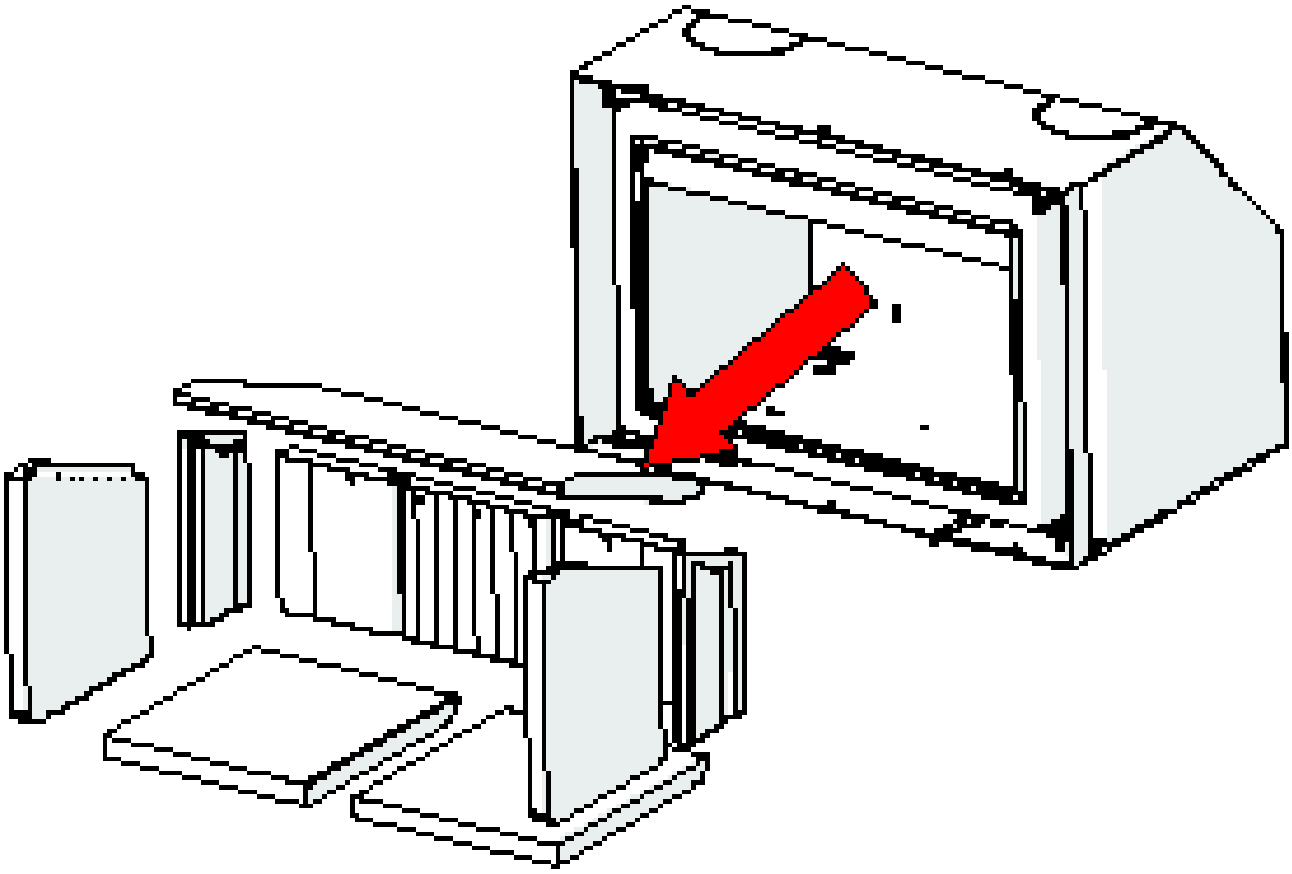

H470W - H570W

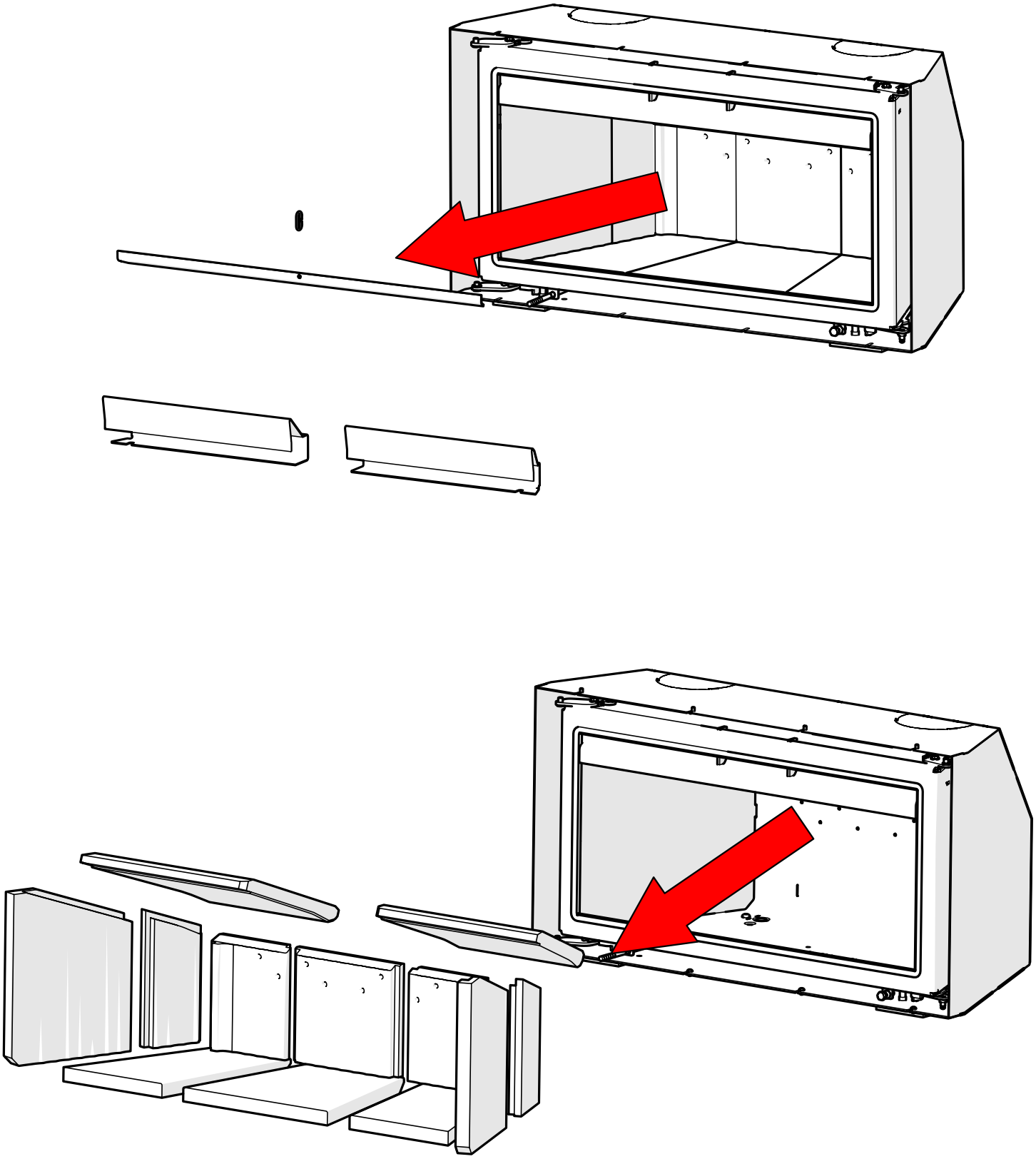

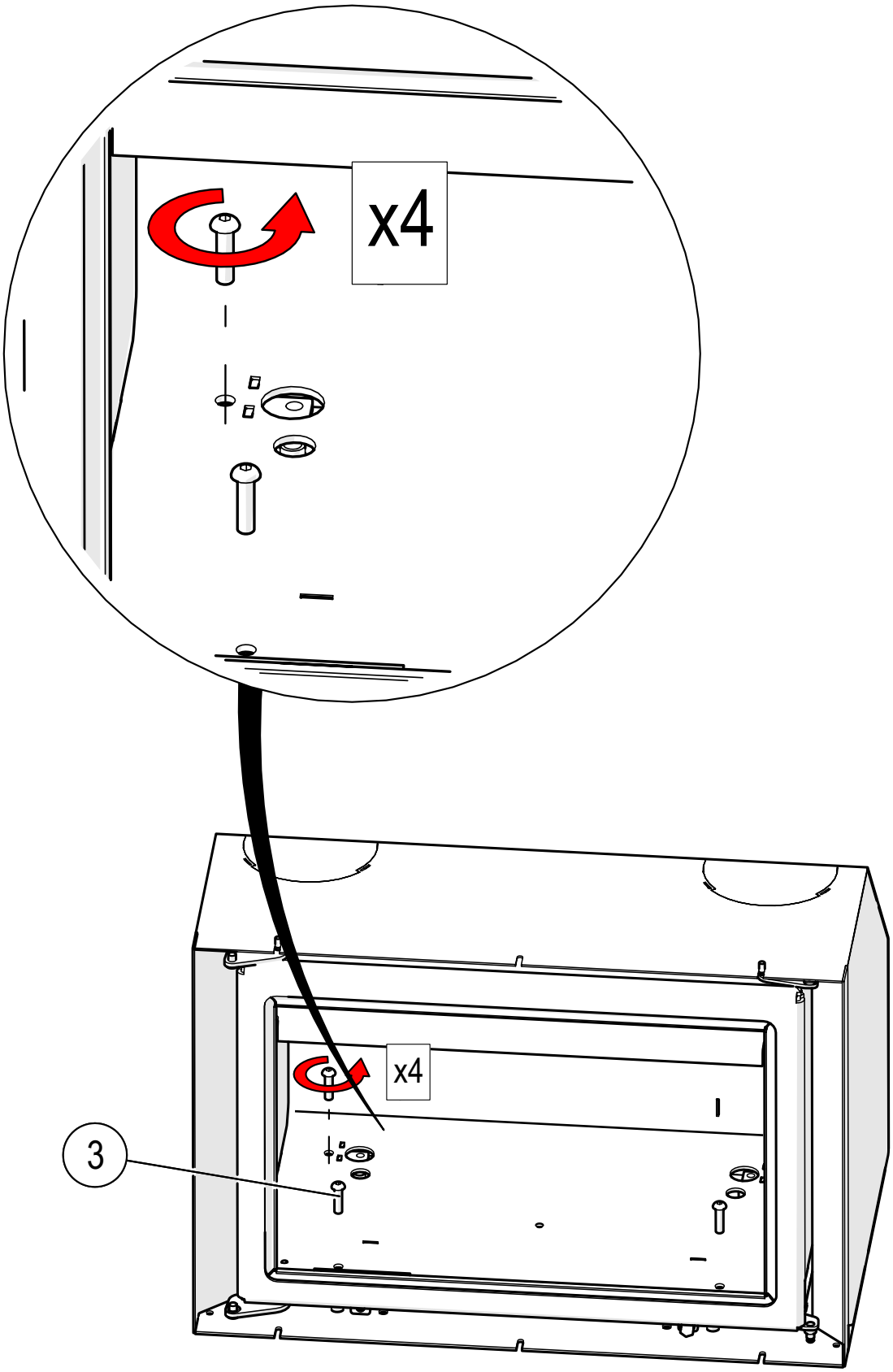
x4
x4
3

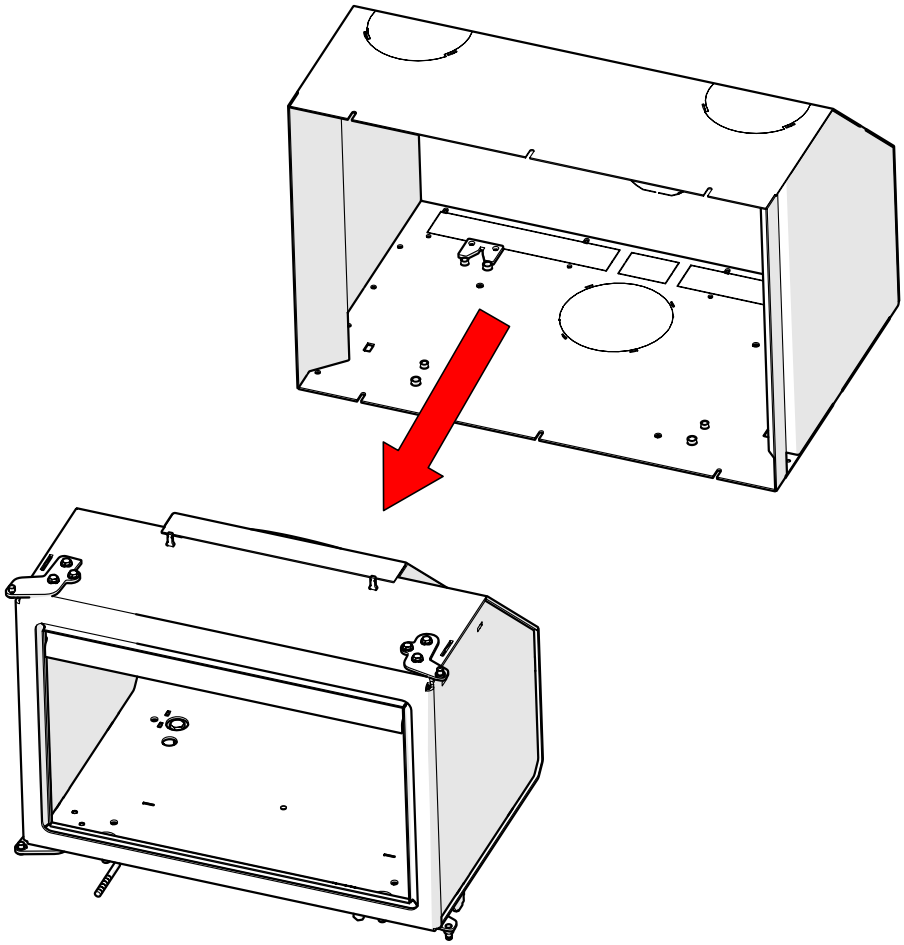

H370

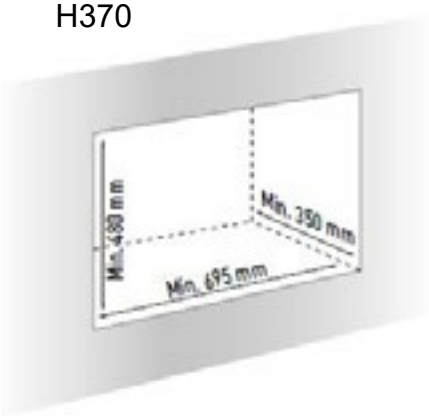

H470

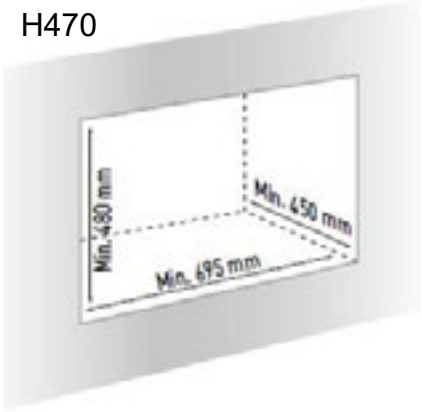

H570

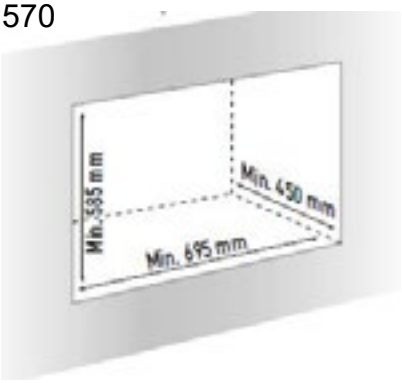

H470W

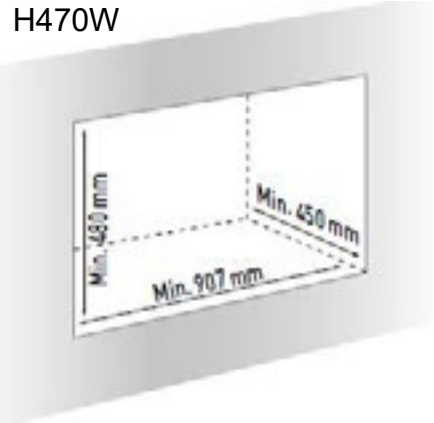

H570W

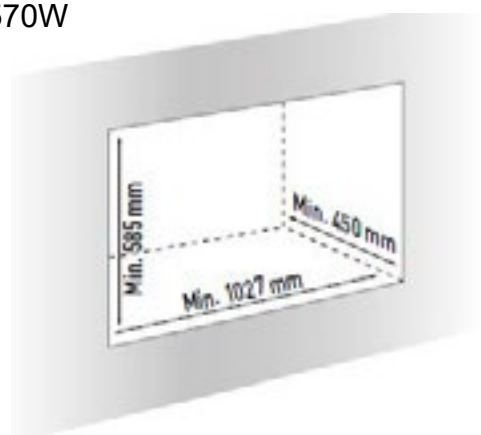

	A	B	C
H370	320	60	320
H470	336	185	336
H570	336	185	336
H470W	551	185	294
H570W	662	185	416

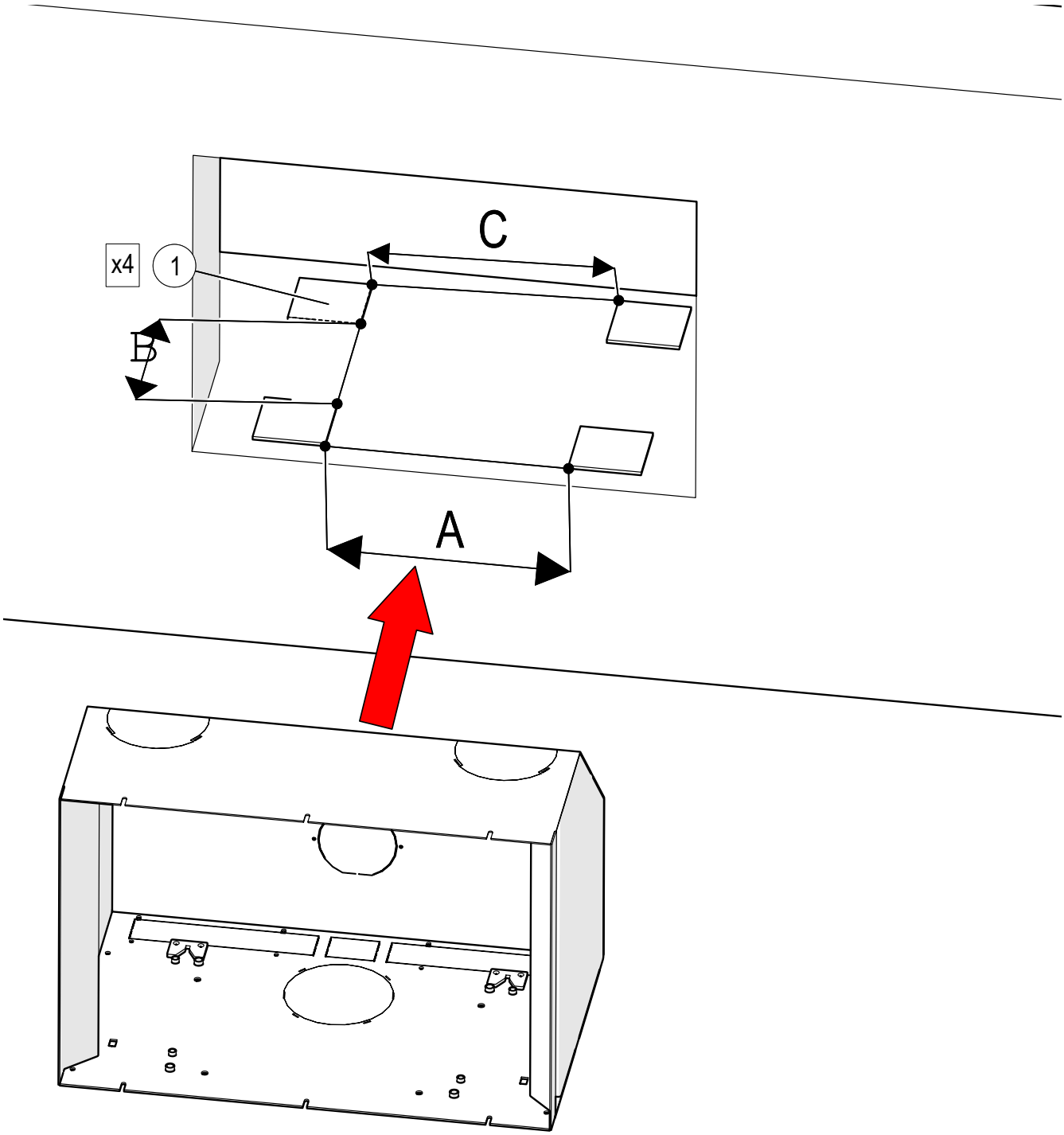

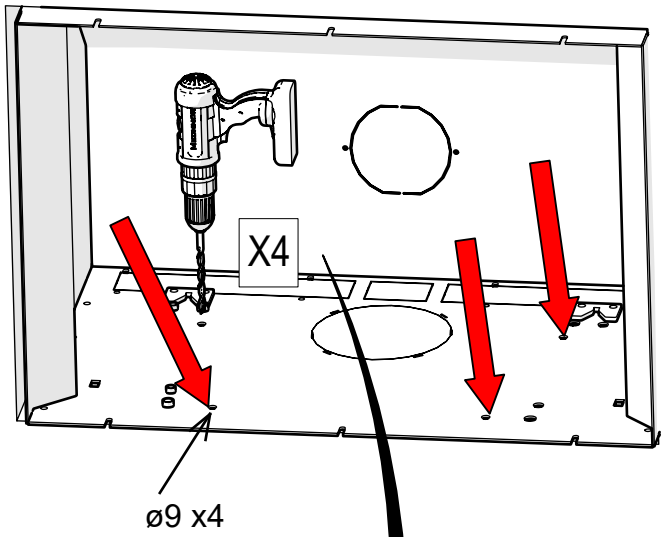
X4
ø9 x4

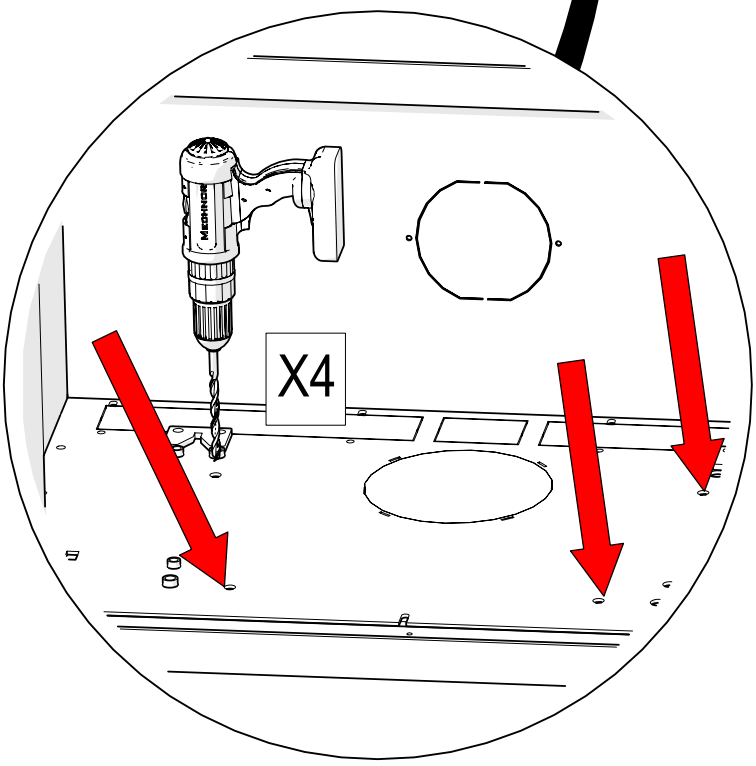
X4

H370-H470-H570

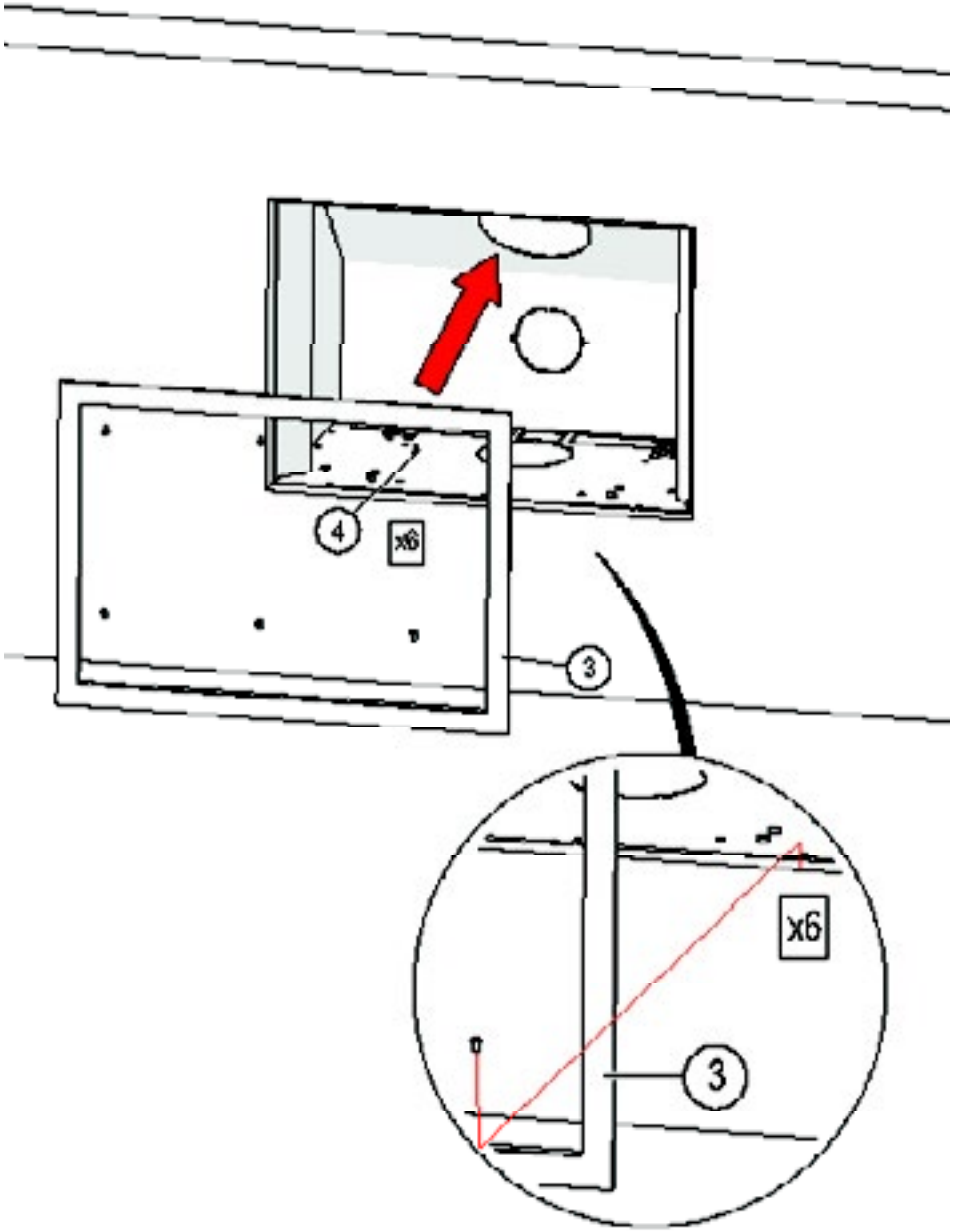

H470W-H570W

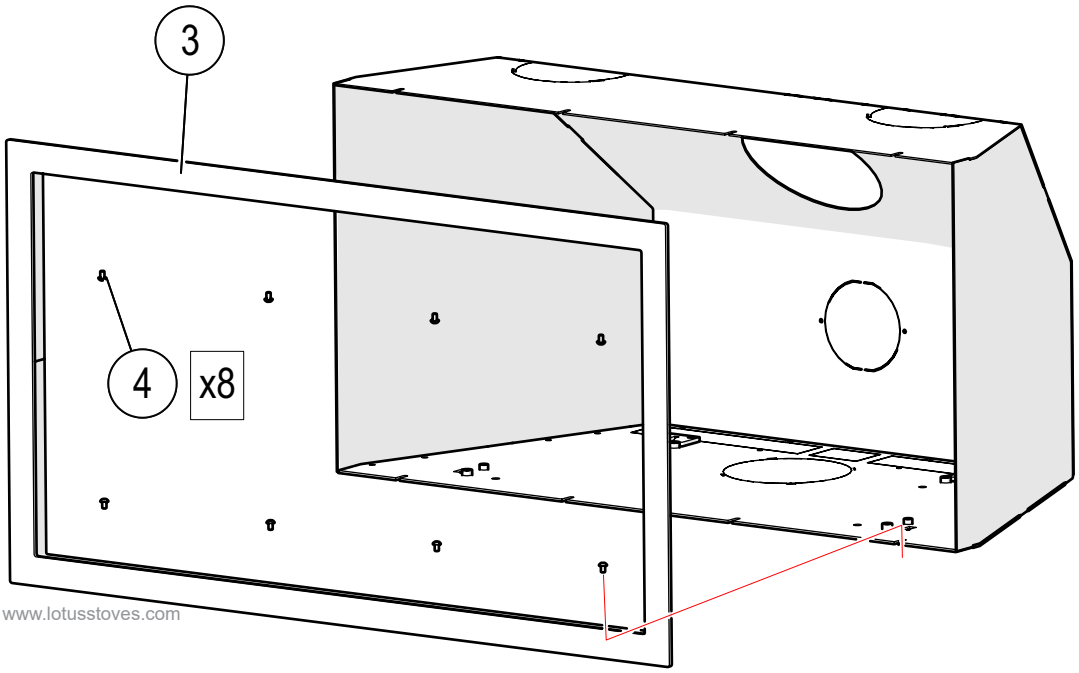

H370-H470-H570-H470W-H570W

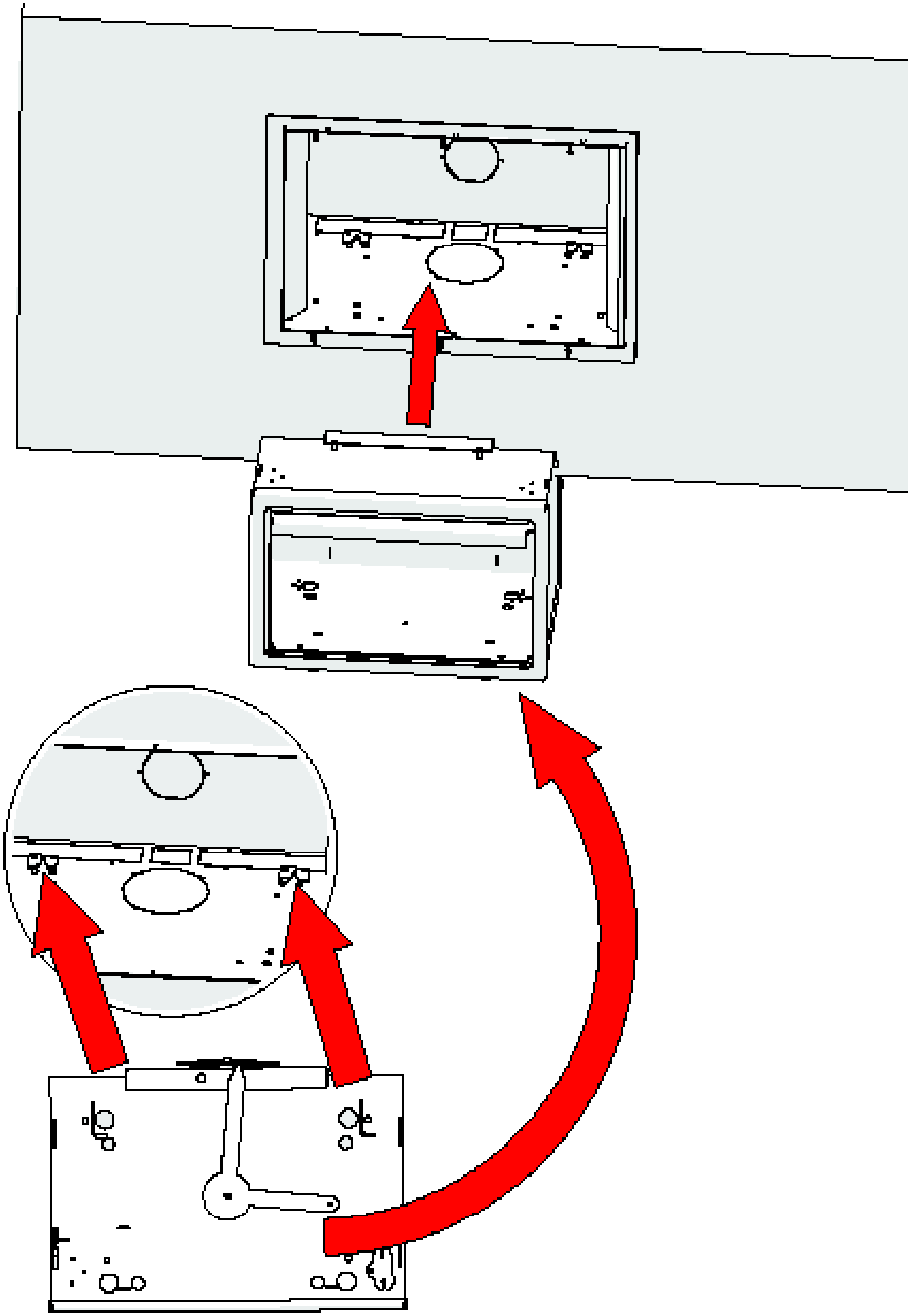

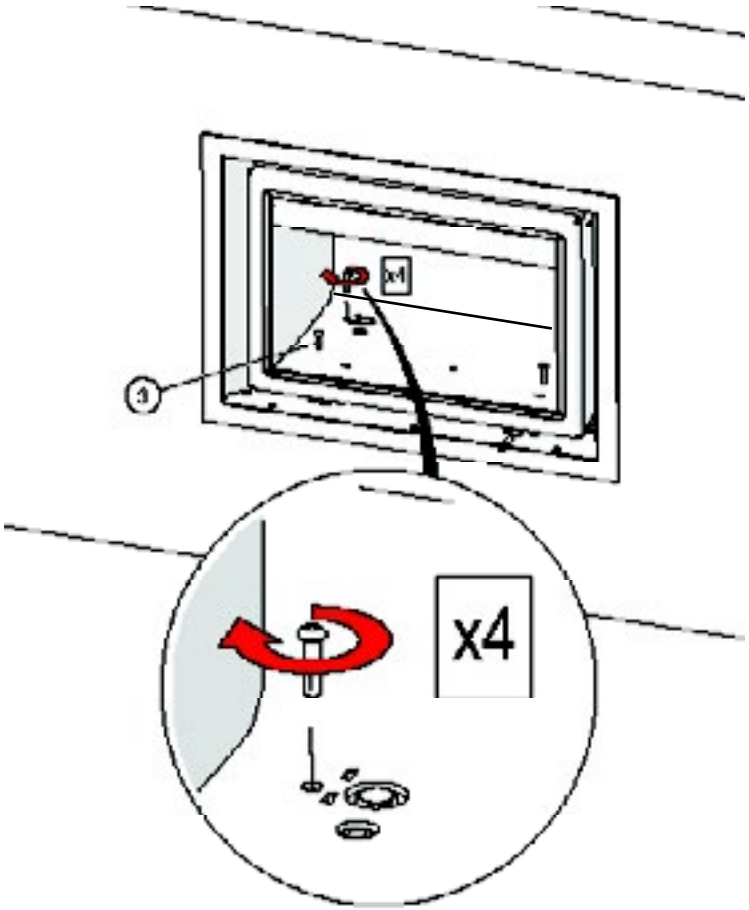
x4

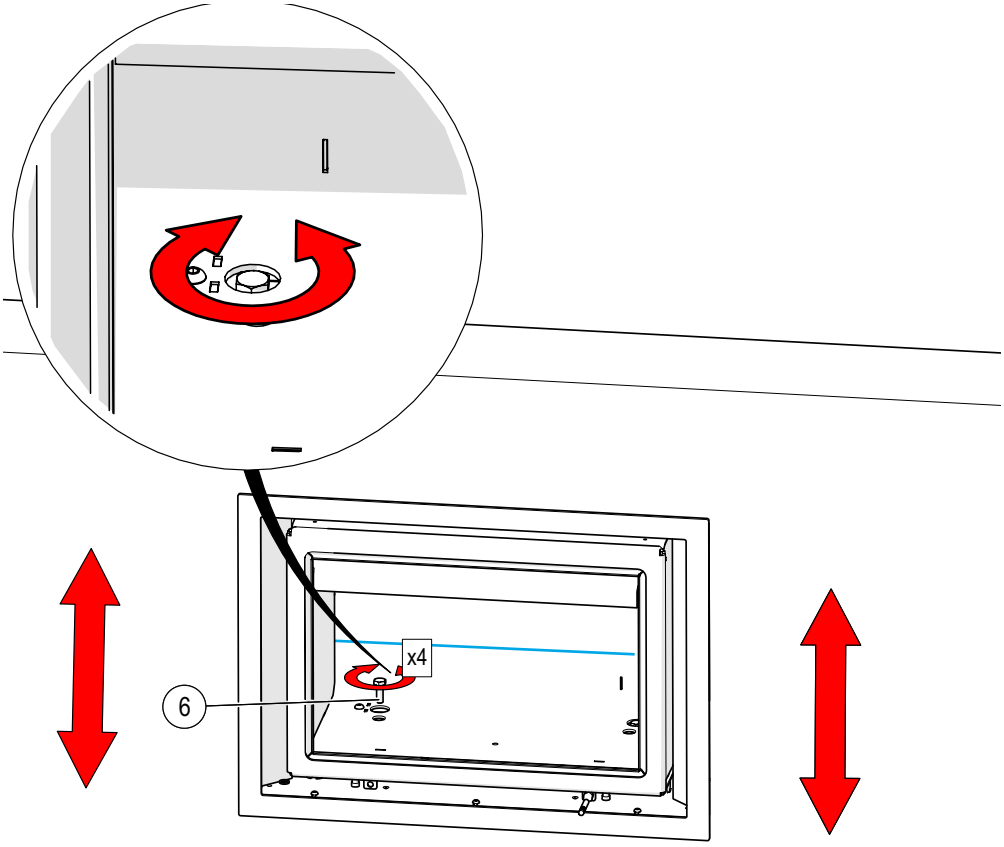
x4
6

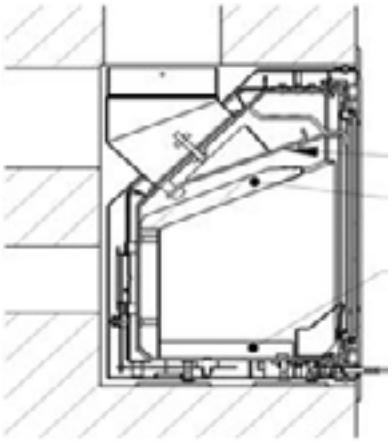

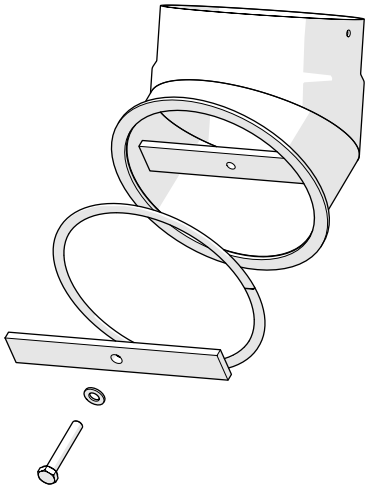

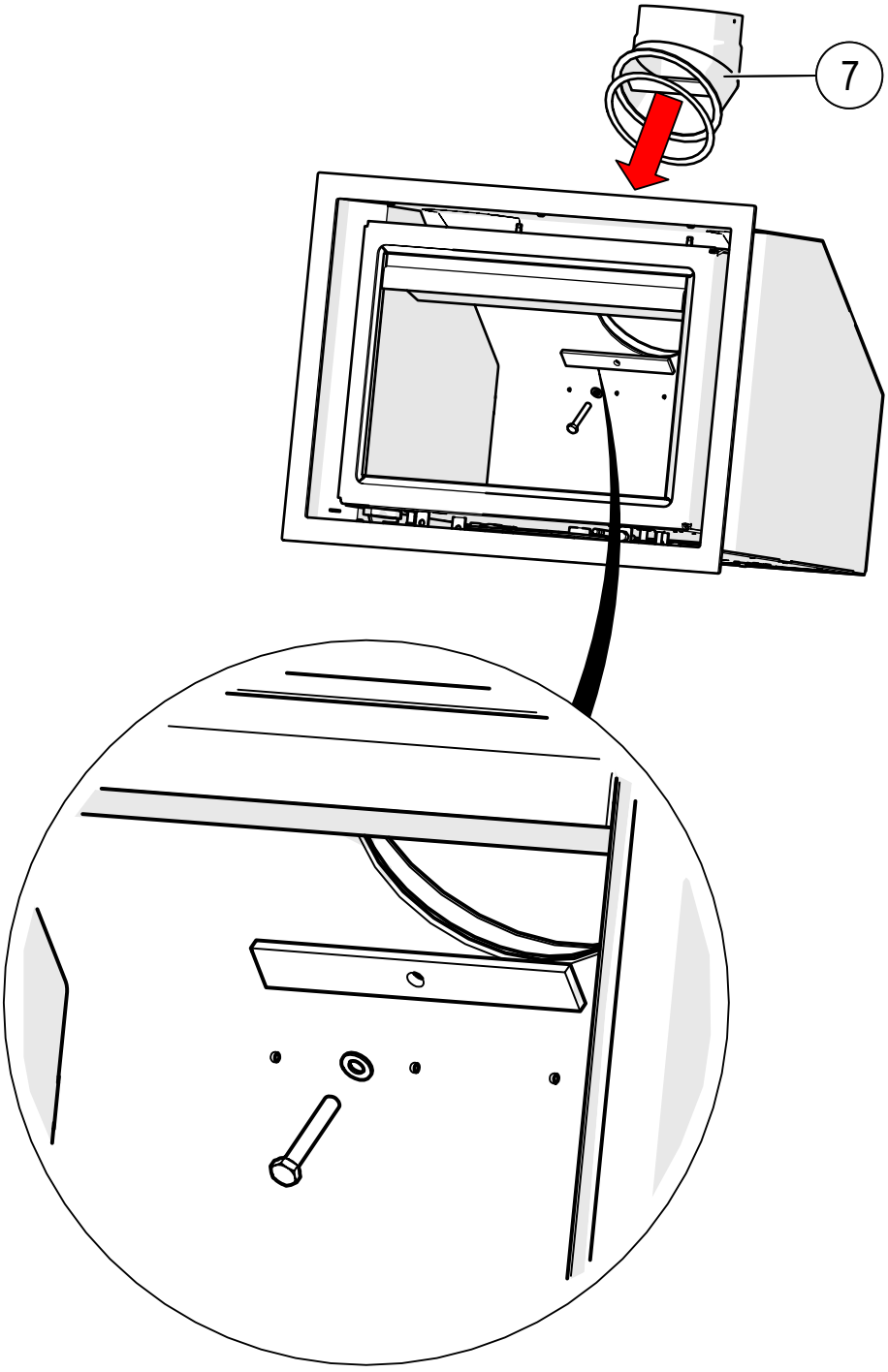
7

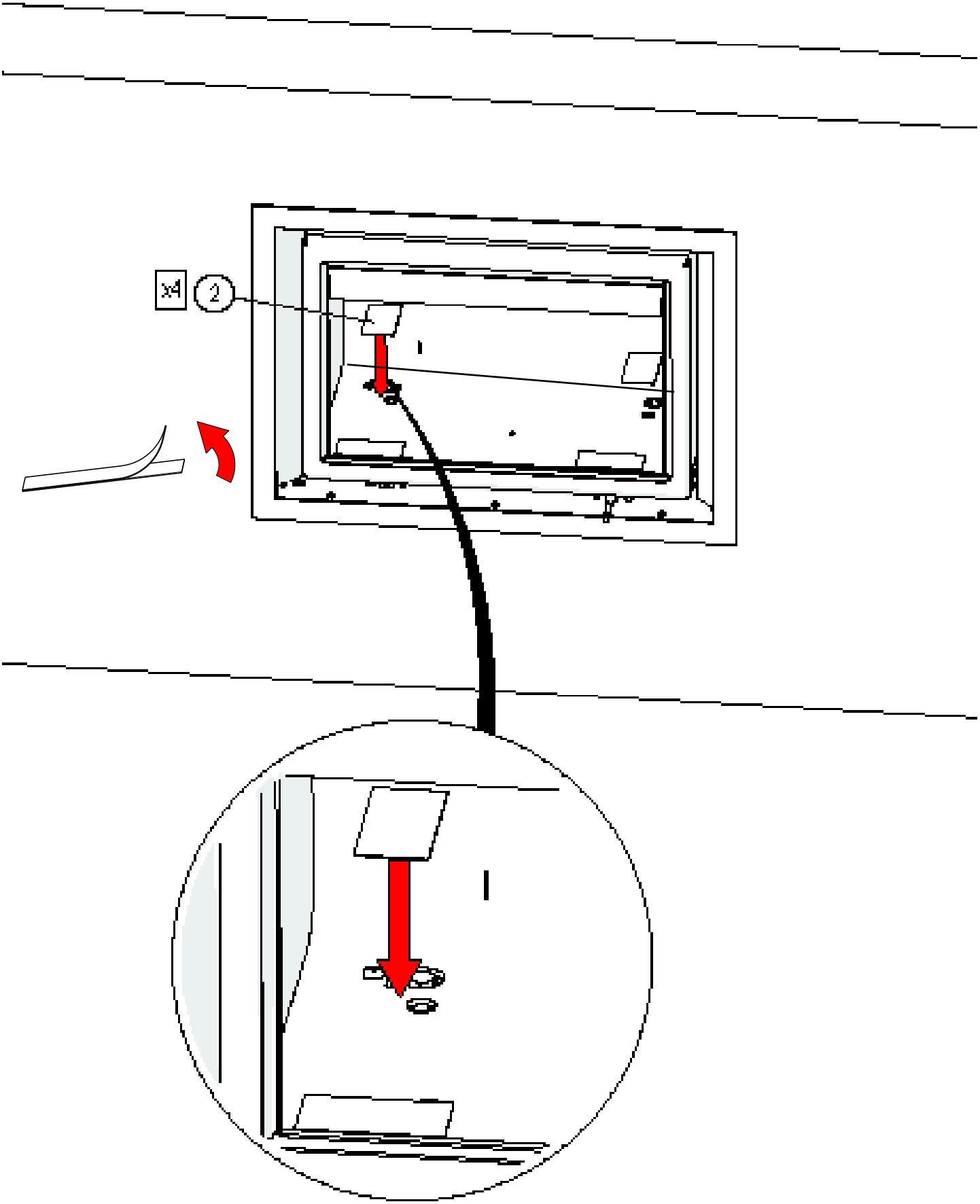
x4
2

H370-H470-H570

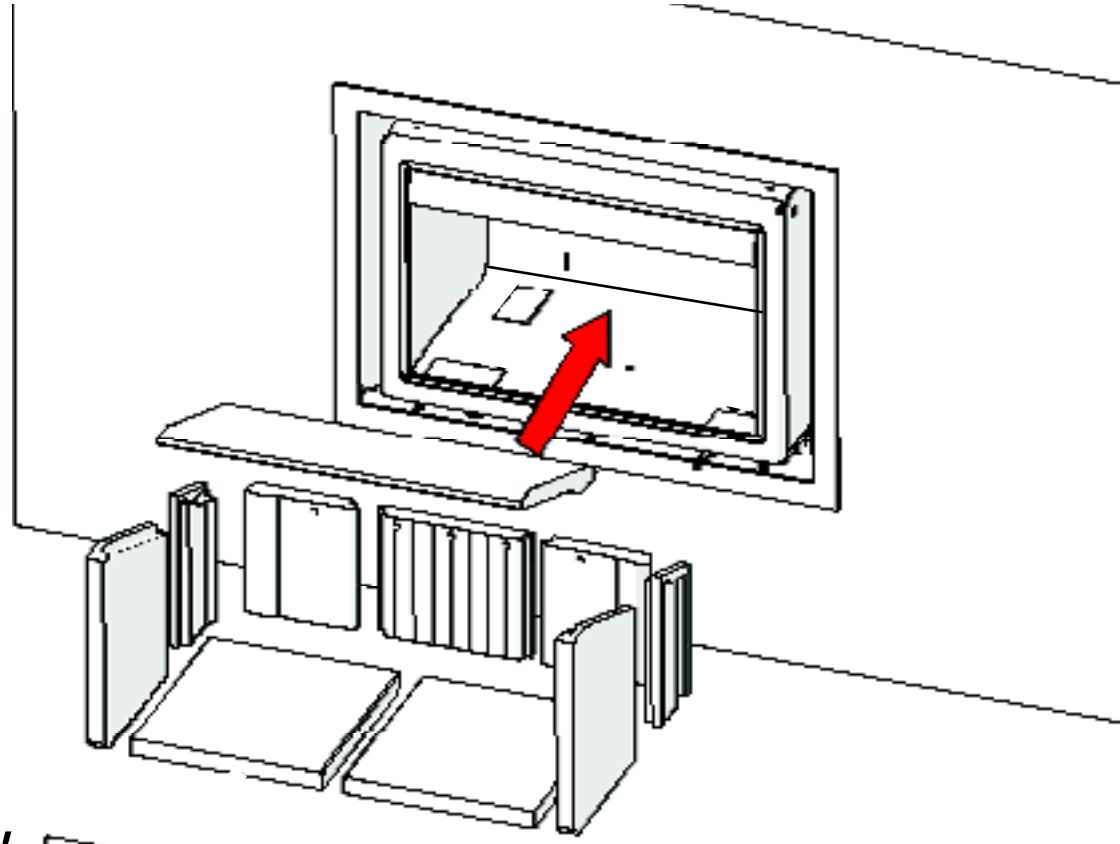

H470W-H570W

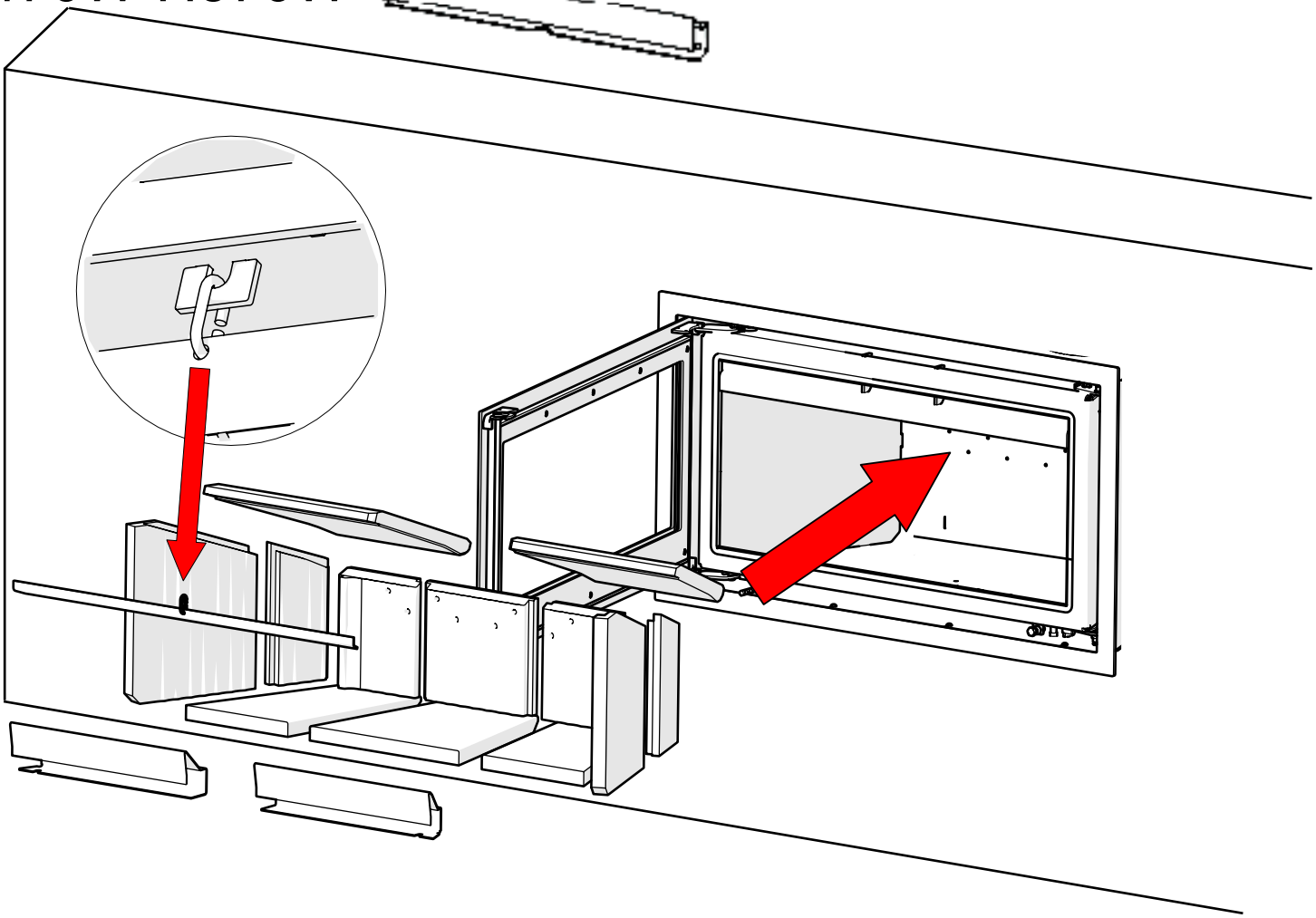

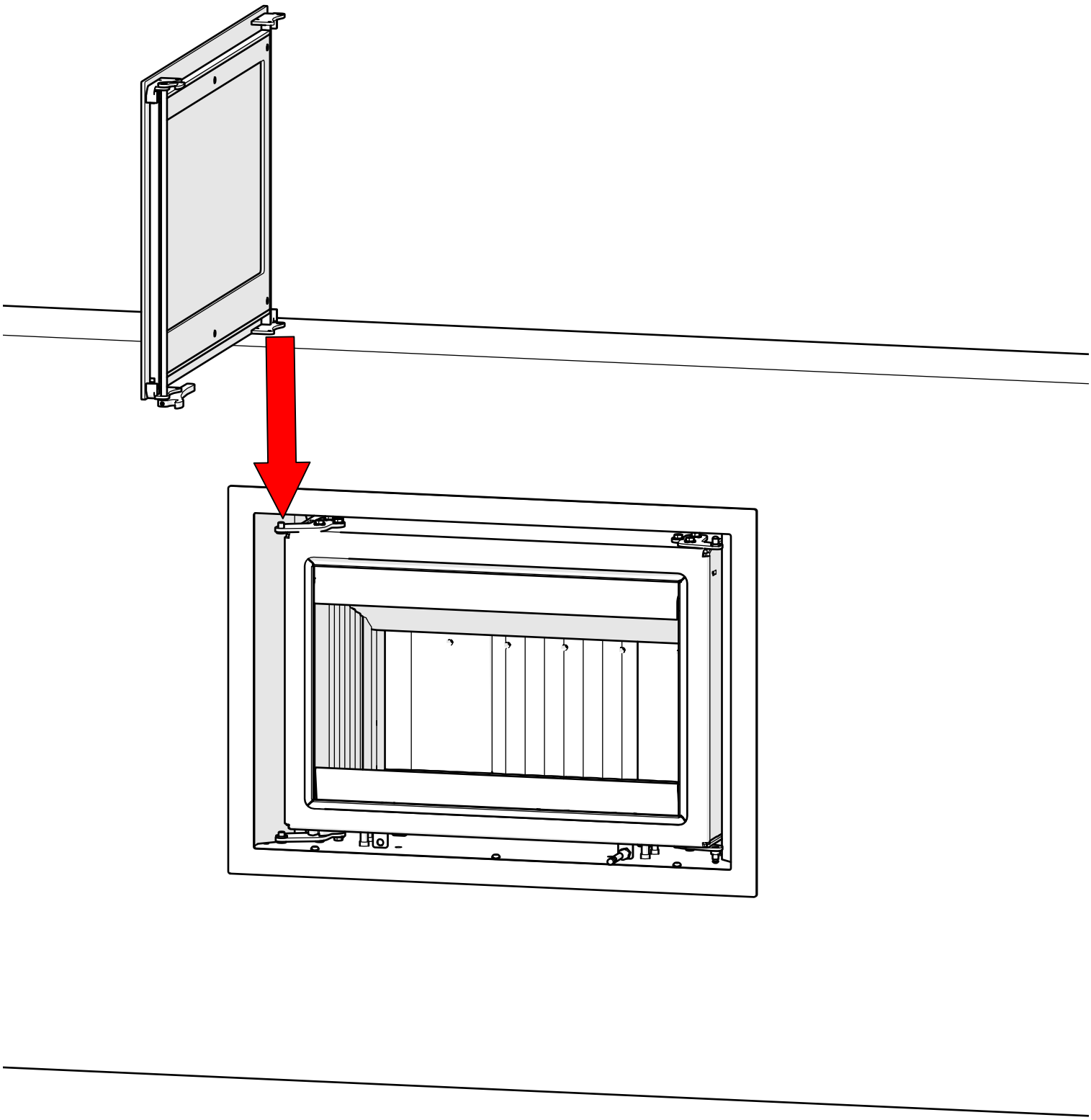

H700

1

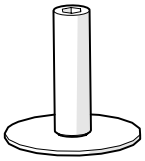

4x 14279

2

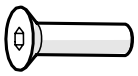

2x 12000

3

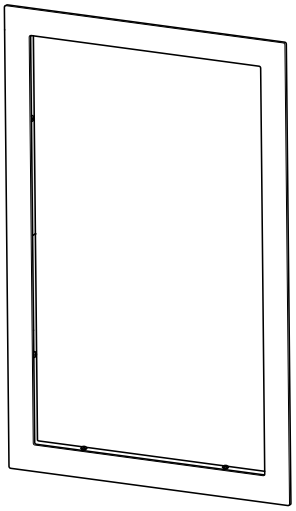

1x 14228

4

8x 11168

5

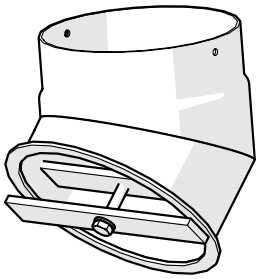

1x 12186

6

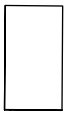

4x 14934

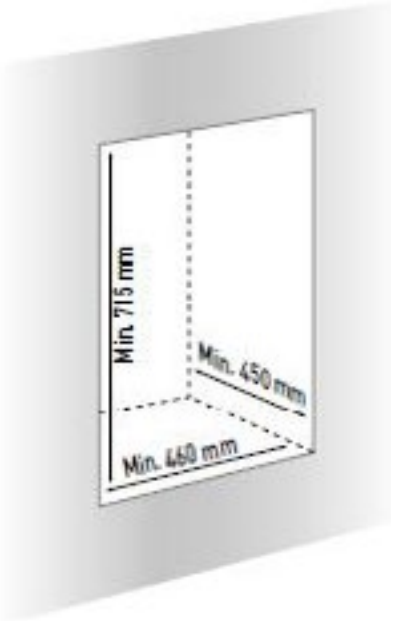

+

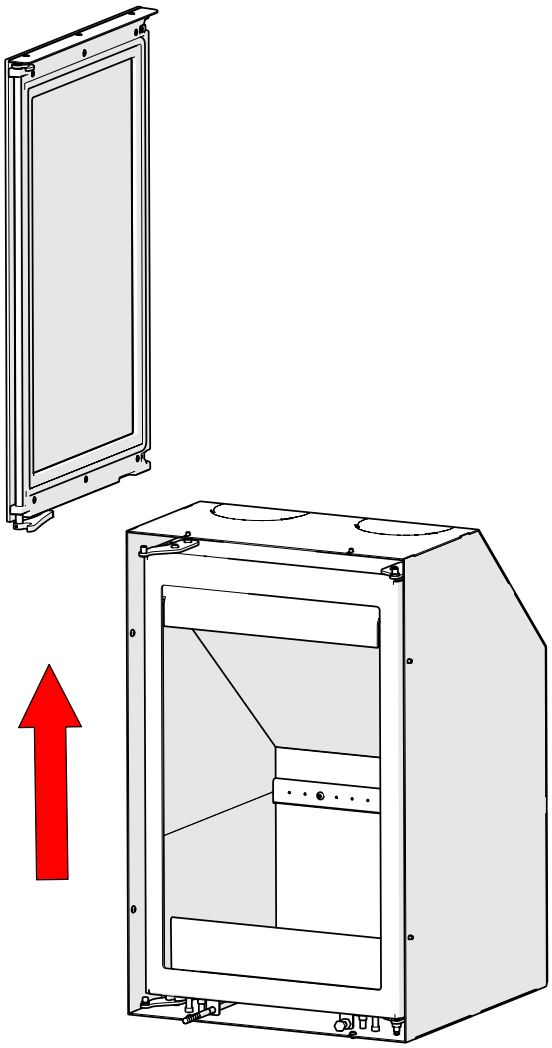

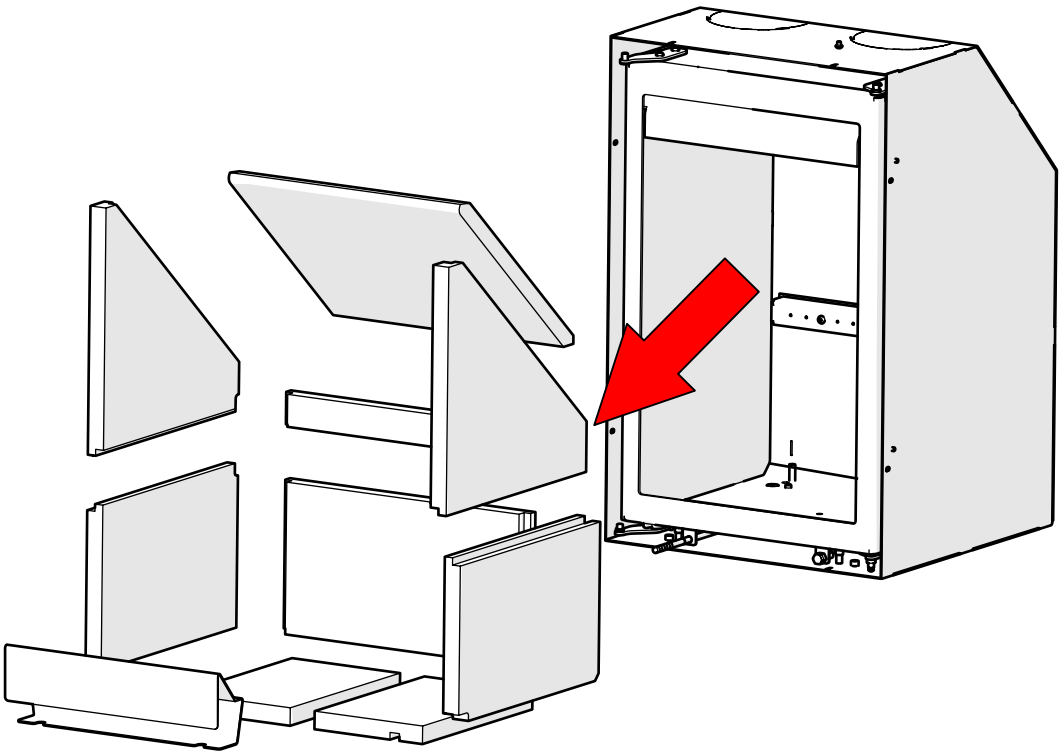

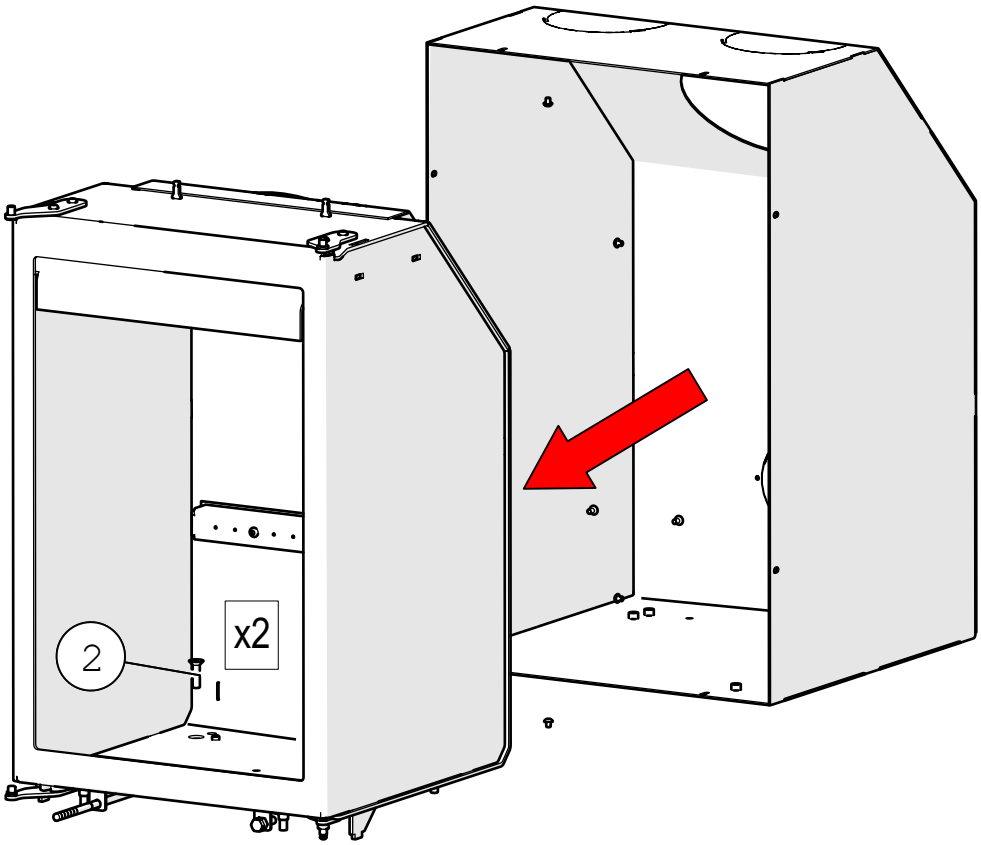
x2
2

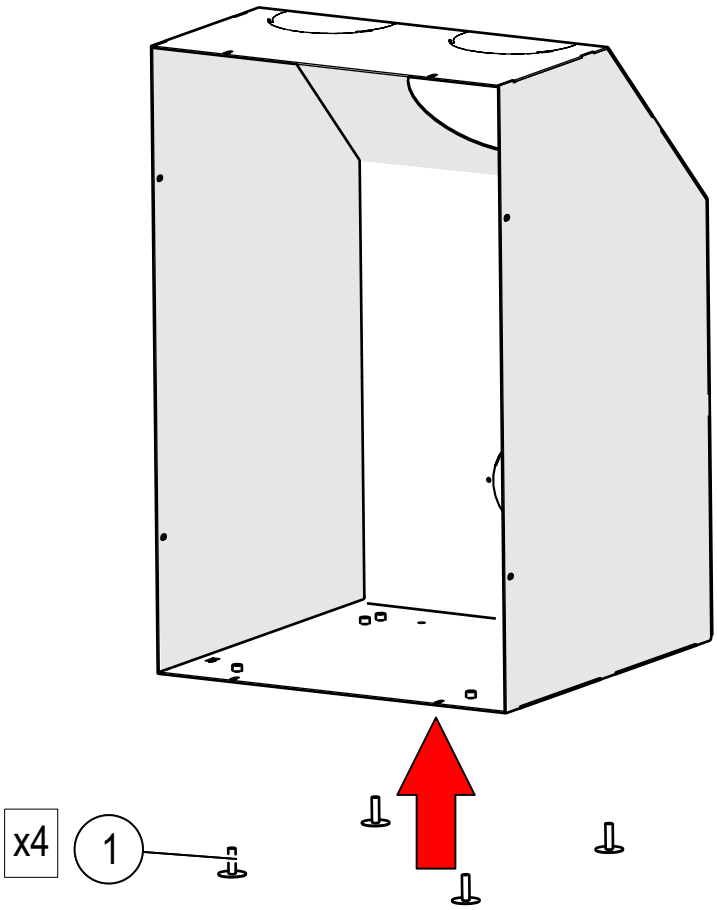
x4
1

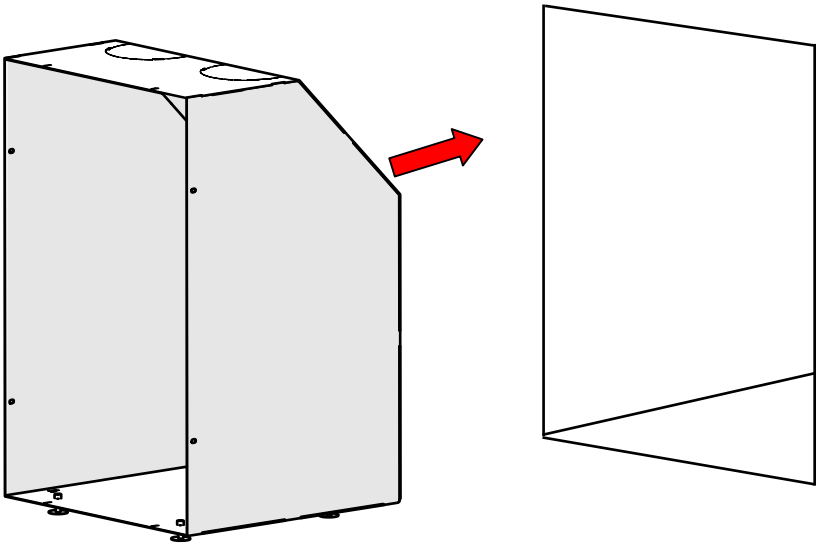

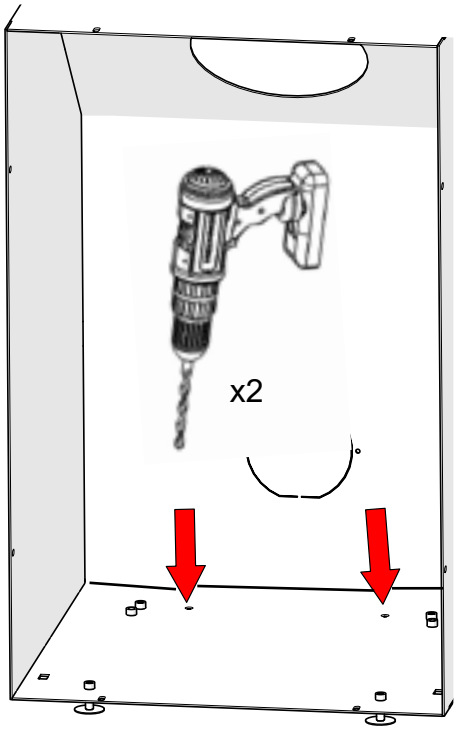
x2

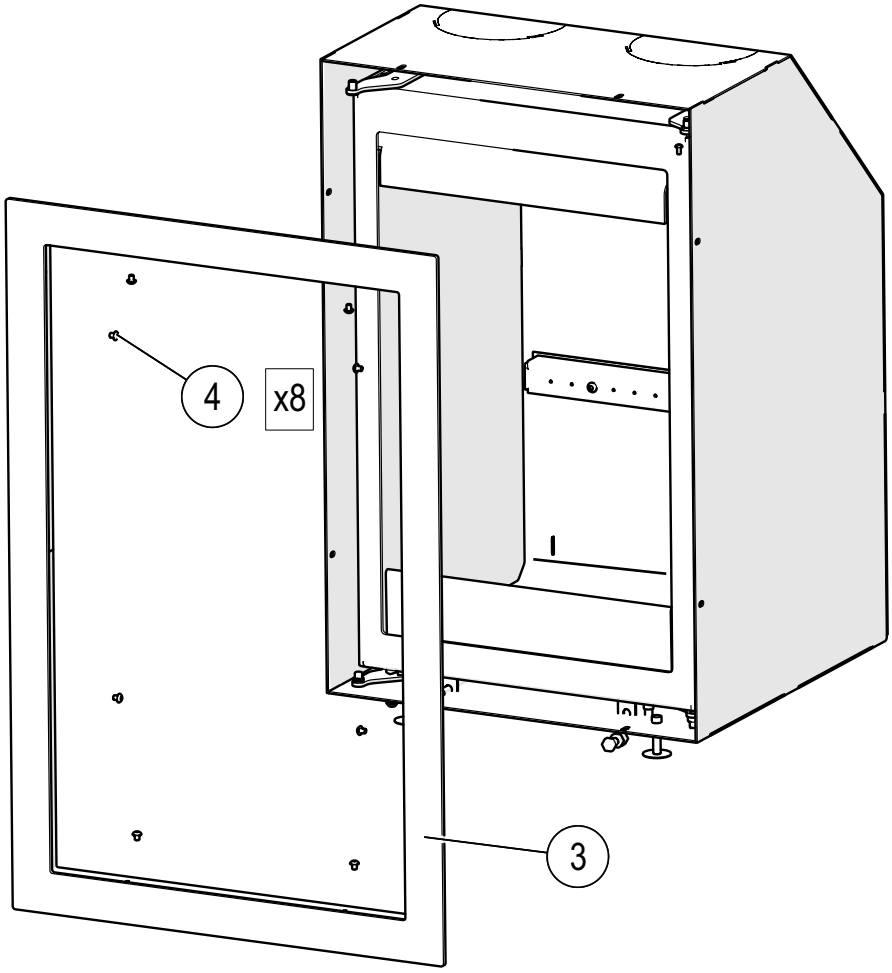
4
x8
3

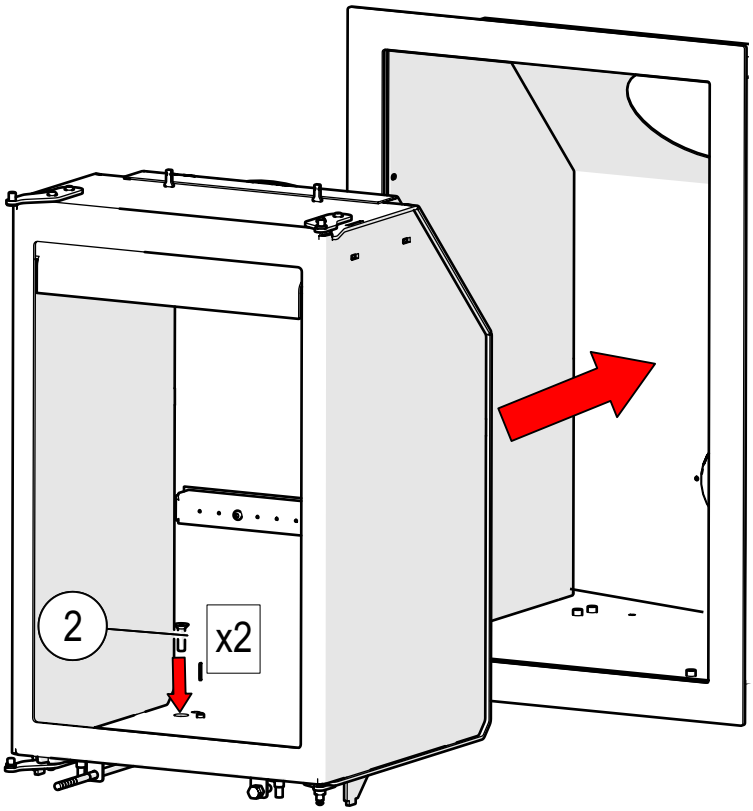
2
x2

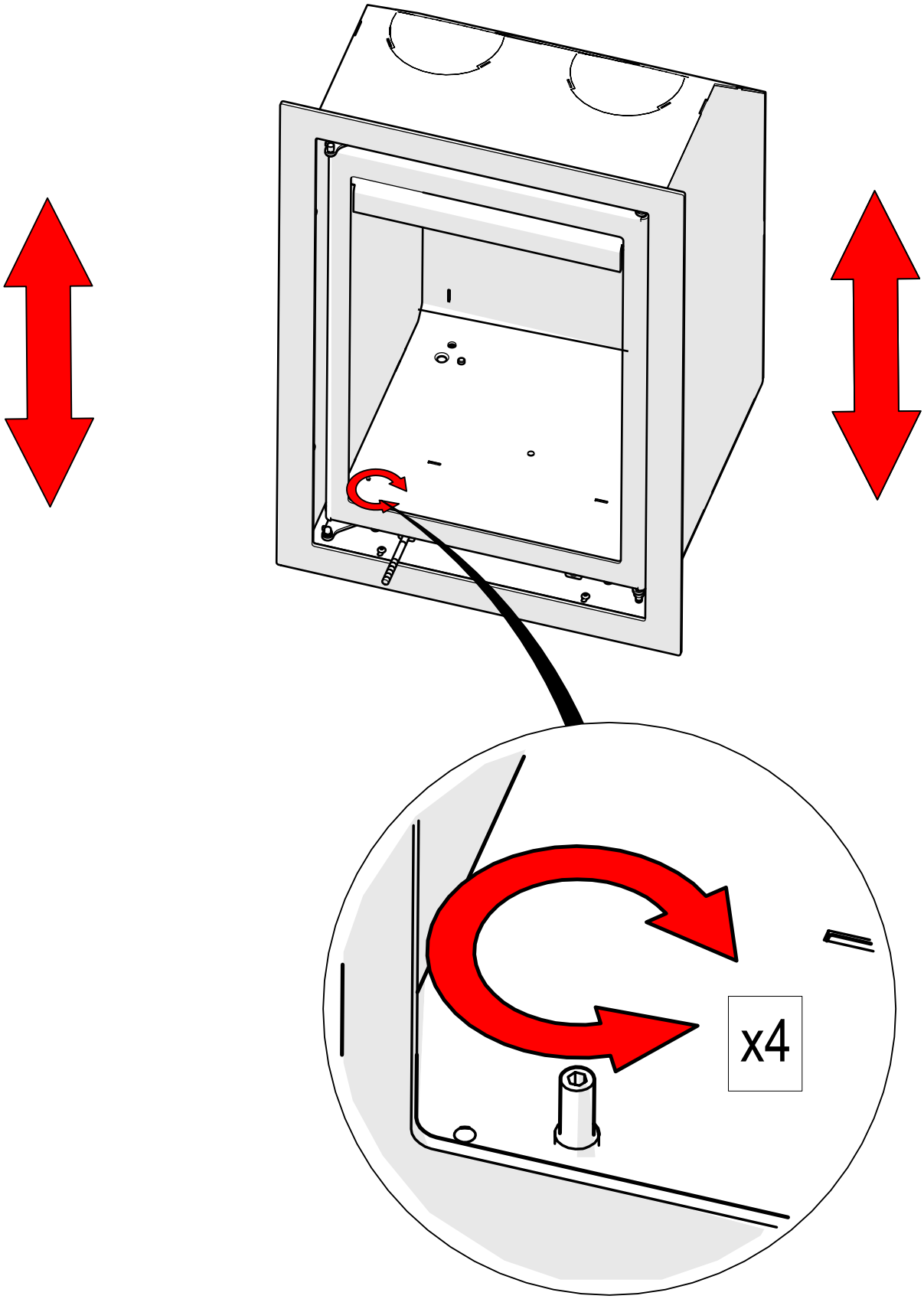
x4

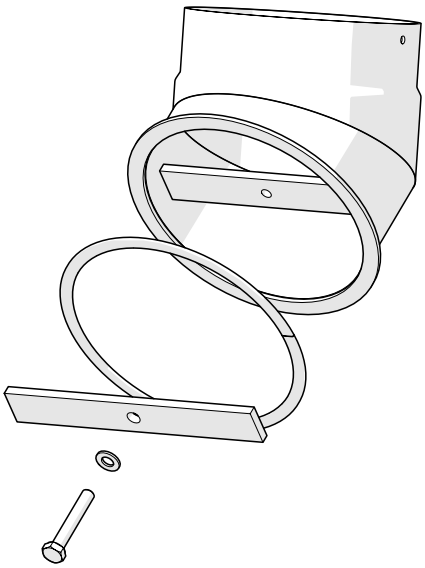

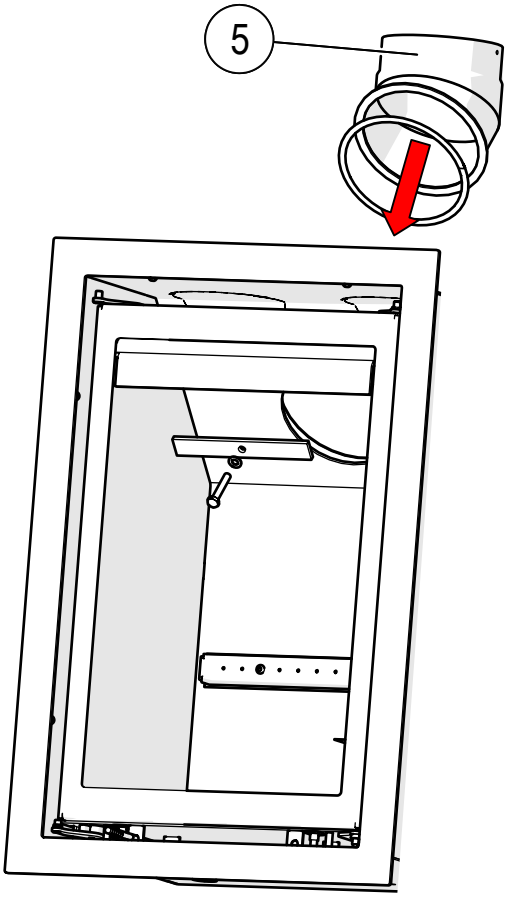
5

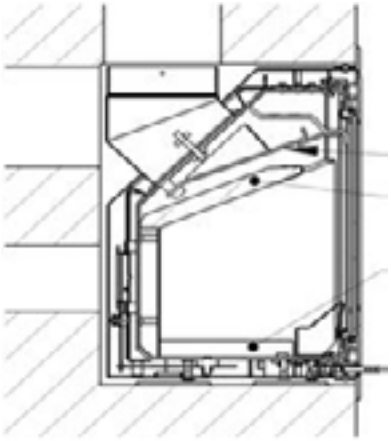

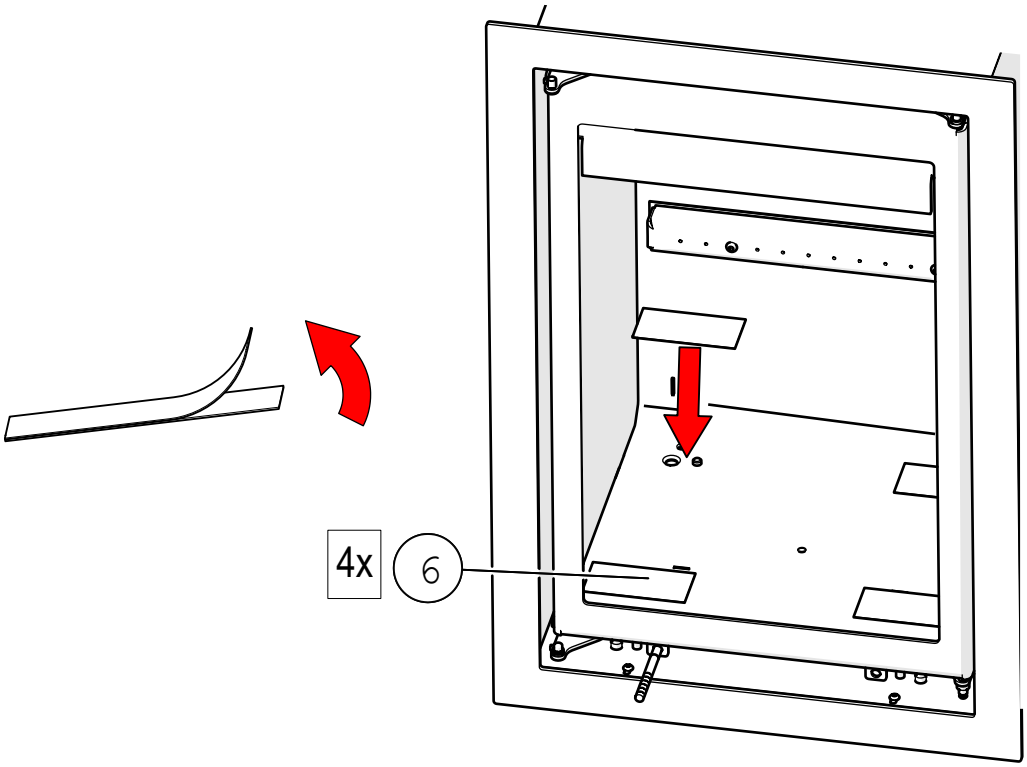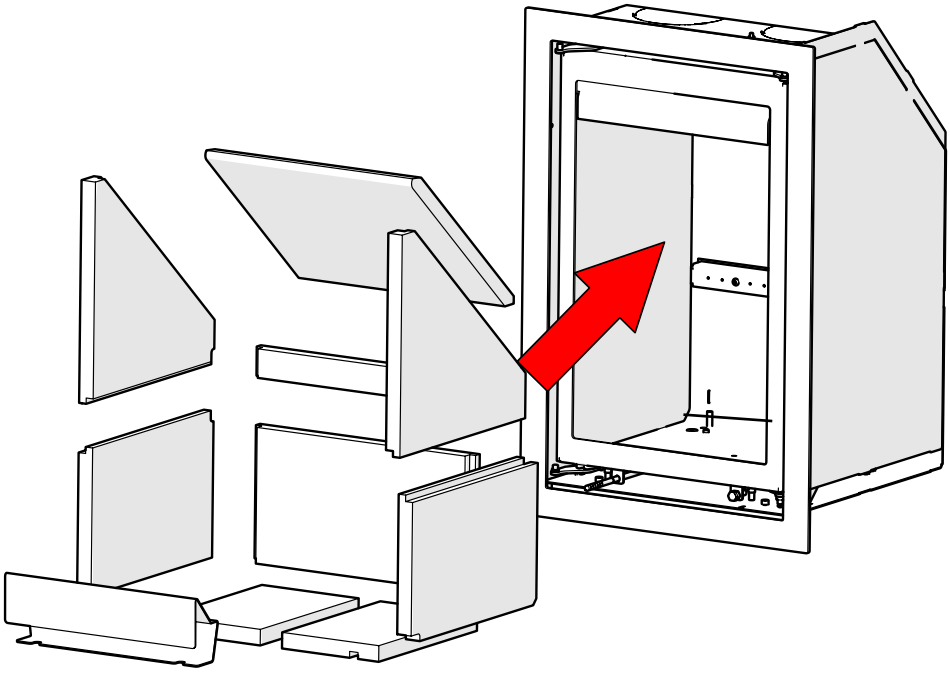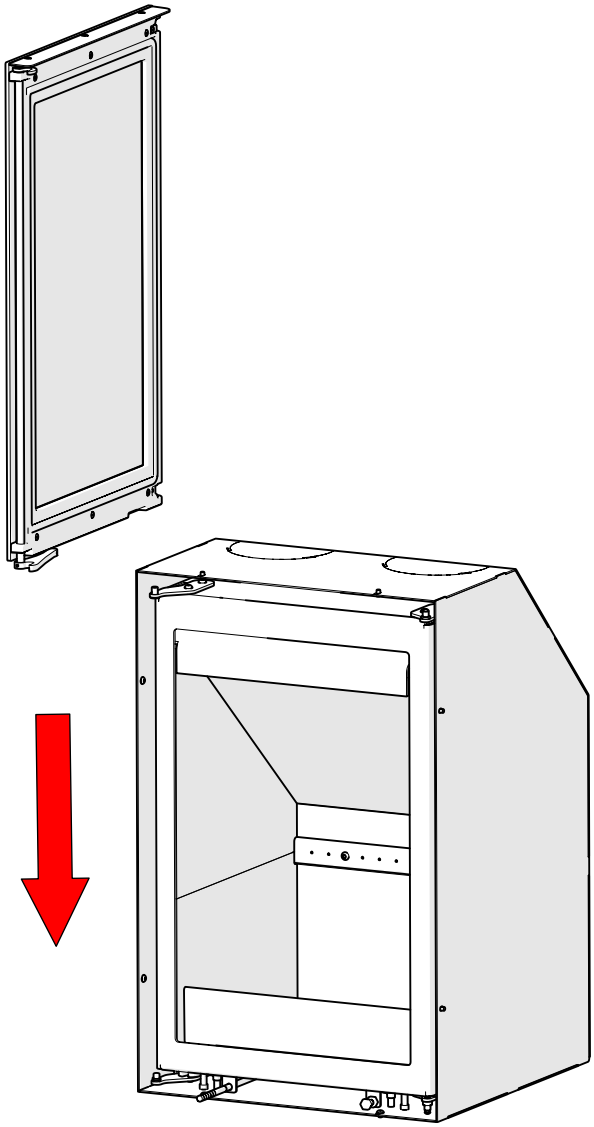
4x
6