Living
Exploded view

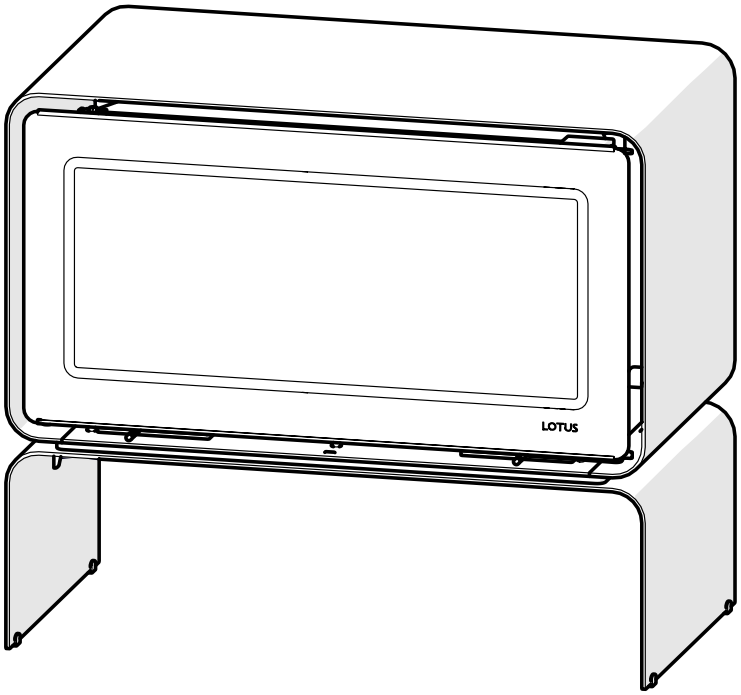

Living

Pos.	Number	Description	Qty
1	13435	Insulation side left front	1
2	13434	Insulation side left back	1
3	10592	Insulation back left	1
4	10585	Insulation back midt	1
5	10581	Insulation back right	1
6	13386	Insulation Side right	1
7	13393	Insulation side rigt front	1
8	10773	Insulation bottom left	1
9	10769	Insulation bottom	1
10	10762	Insulation bottom right	1
11	13187	Deflectorplate left	1
12	13185	Deflector plate right	1
13	10820	Bracket	1
14	12227	Hook to smoke shelf holder	1

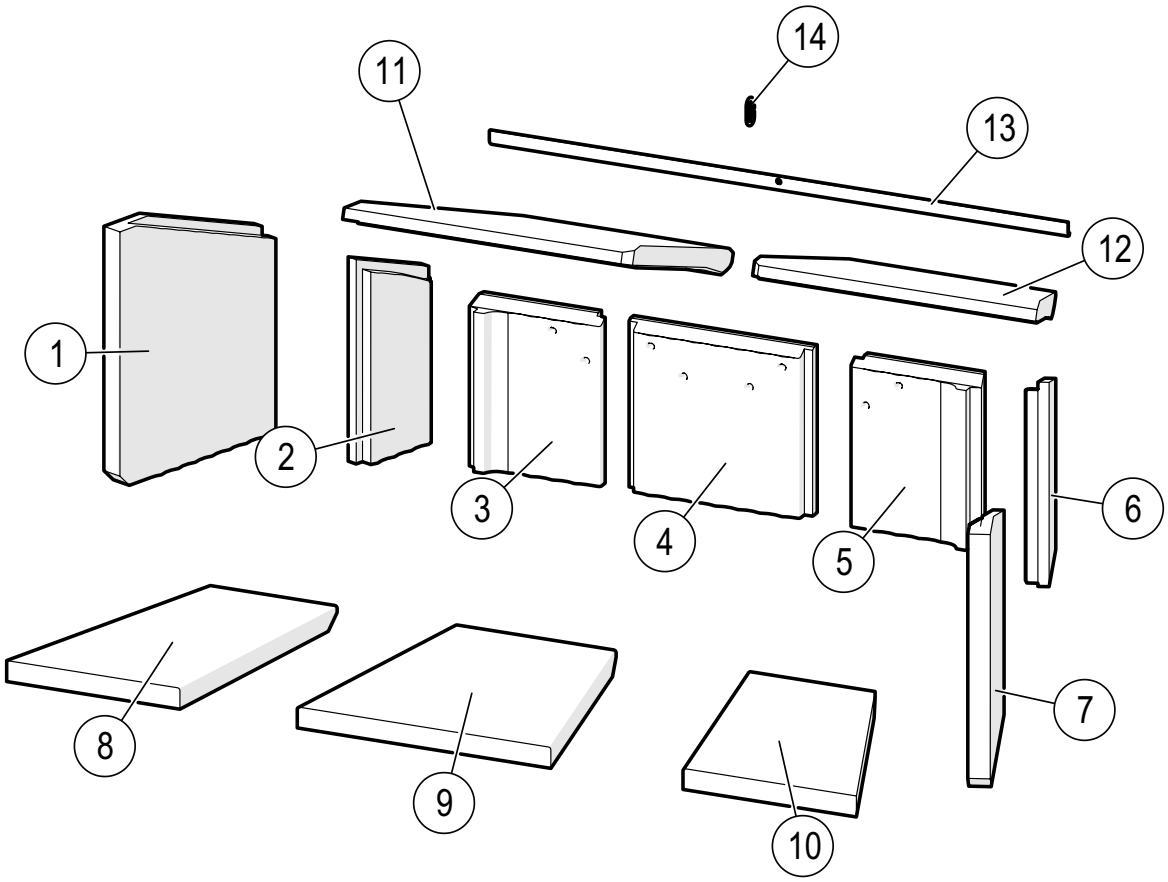

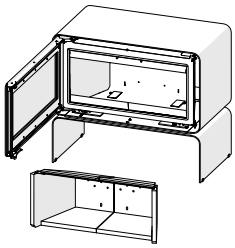

Living

Pos.	Number	Description	Qty
1	12446	Loose log stop left	1
2	12444	Loose log stop	1

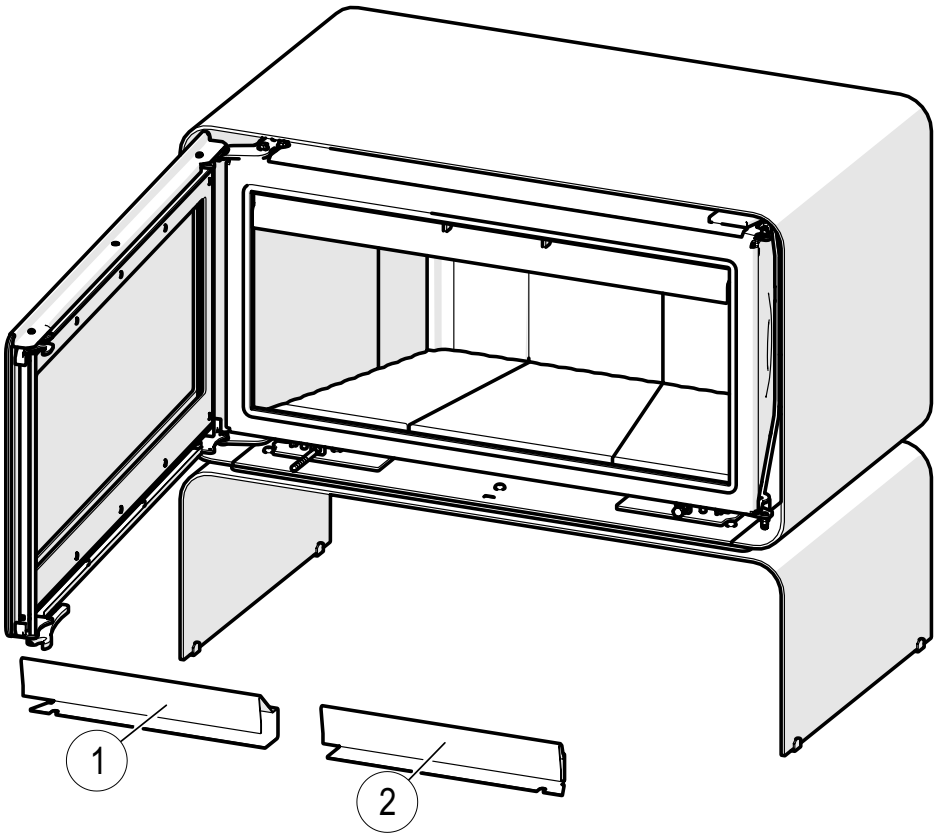

Living

Pos.	Number	Description	Qty
1	12359/12361/12362*	Air handle	1
2	12376	Air bar	1
3	10987	Turn shaft	1
4	12651	Nut M5 DIN 934 8.8	1
5	13701	Buttonhead screw M5 x 12 ISO7380	1
6	12174	Prevailing torque nut	1
7	13849	Damper plate	1
8	13667	Washer 10 mm DIN125A	1
9	11137	Spring	1
10	13765	Plain washer 5 mm DIN9021	1
11	11169	Button head screw M5 x 8	1
12	14276	Damper, welded	1
13	11970	Screw countersunk M5x10 DIN7991	2

*depends on colour/style

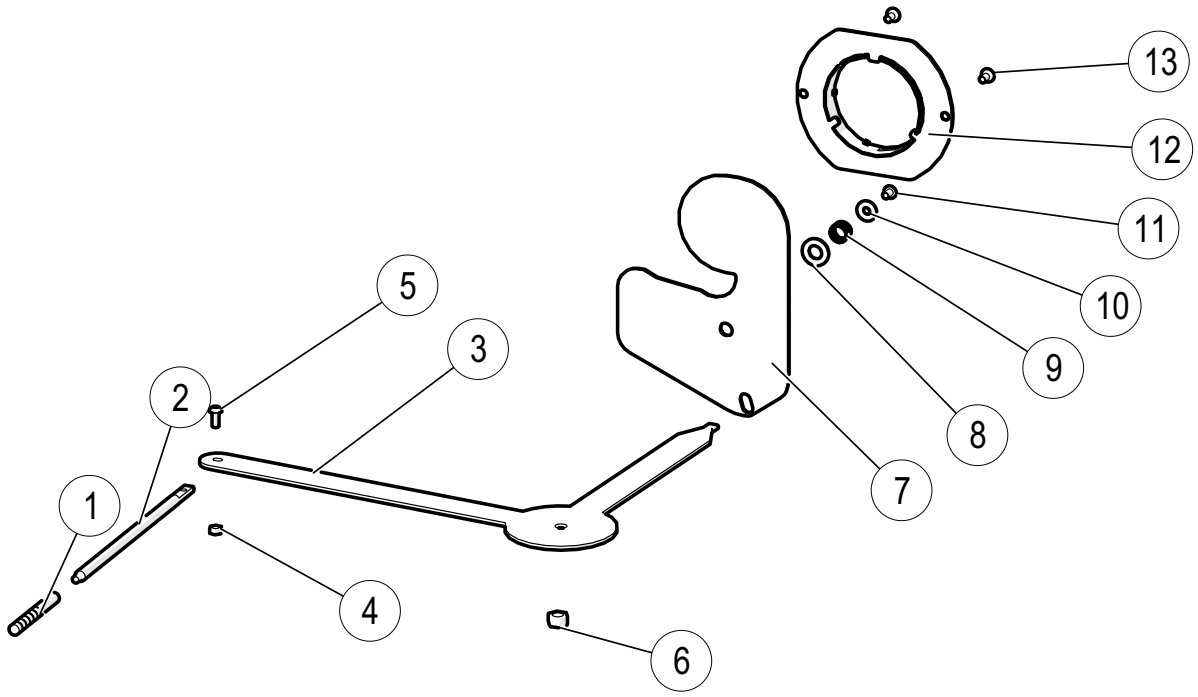

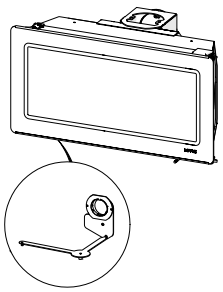

Living

Pos.	Number	Description	Qty
1	12359/12361/12362*	Glass door	1
2	15227	Glass holder bottom on door	1
3	11968	Hex countersunk head M4x8	14
4	14254	Welded door magic	1
5	11505	Glass holder on top	1
6	14898	Distance part	2
7	13694	Button head screw M4 x 6	2
8	11379	Glass	1
9	12753	Spacer for glass	2
10	12818	Seal door	2
11	12501/12502/12503/12504*	Air handle	1
12	12401	Closing hook	1
13	14009	Socket set screw M5 x 6 DIN913	1
14	12398	Closing mechanism, welded	1
15	10566	Back frame	1
16	14003	Socket set screw M5 x 20 DIN913	1
17	14586	Shim washer	1

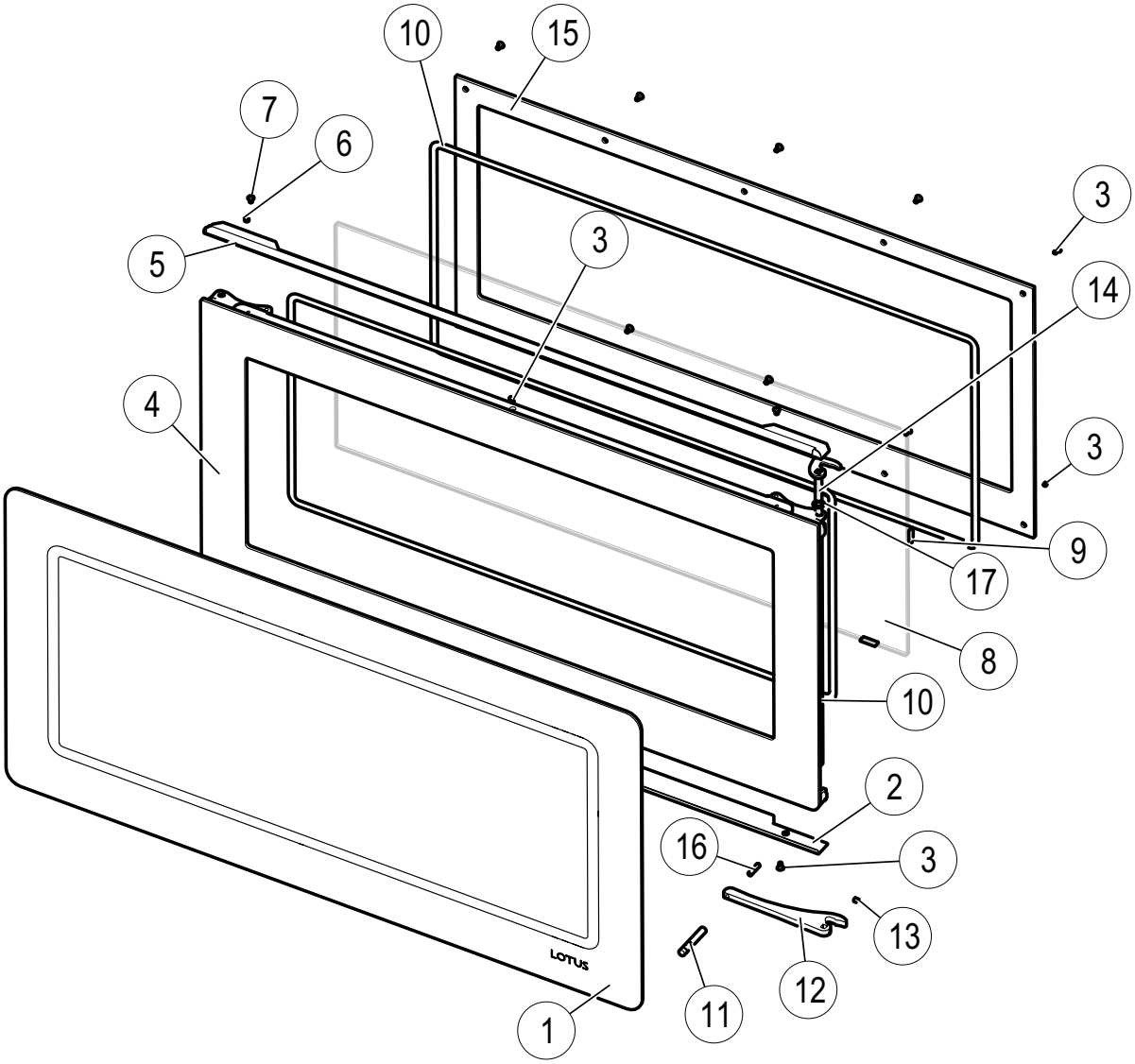

Living

Pos.	Number	Description	Qty
1	11698	Hex ribbed flange bolt M6x10	9
2	13795	Hex ribbed flange bolt M6x20	3
3	14217	Welded bottom hinge on stove	1
4	12591	Washer Brass	1
5	11805	Hinge block	1
6	12428	Welded bottom roll	1
7	12412	Bushing	2
8	13694	Button head screw M4 x 6 ISO7380 10.9	1
9	14217	Welded bottom hinge on stove	1
10	12534	Starlock 8mm	1
11	14874	Welded cover on top of chamber	1
12	12430	Welded top roll	1
13	13695	Button head screw M4 x 8	1

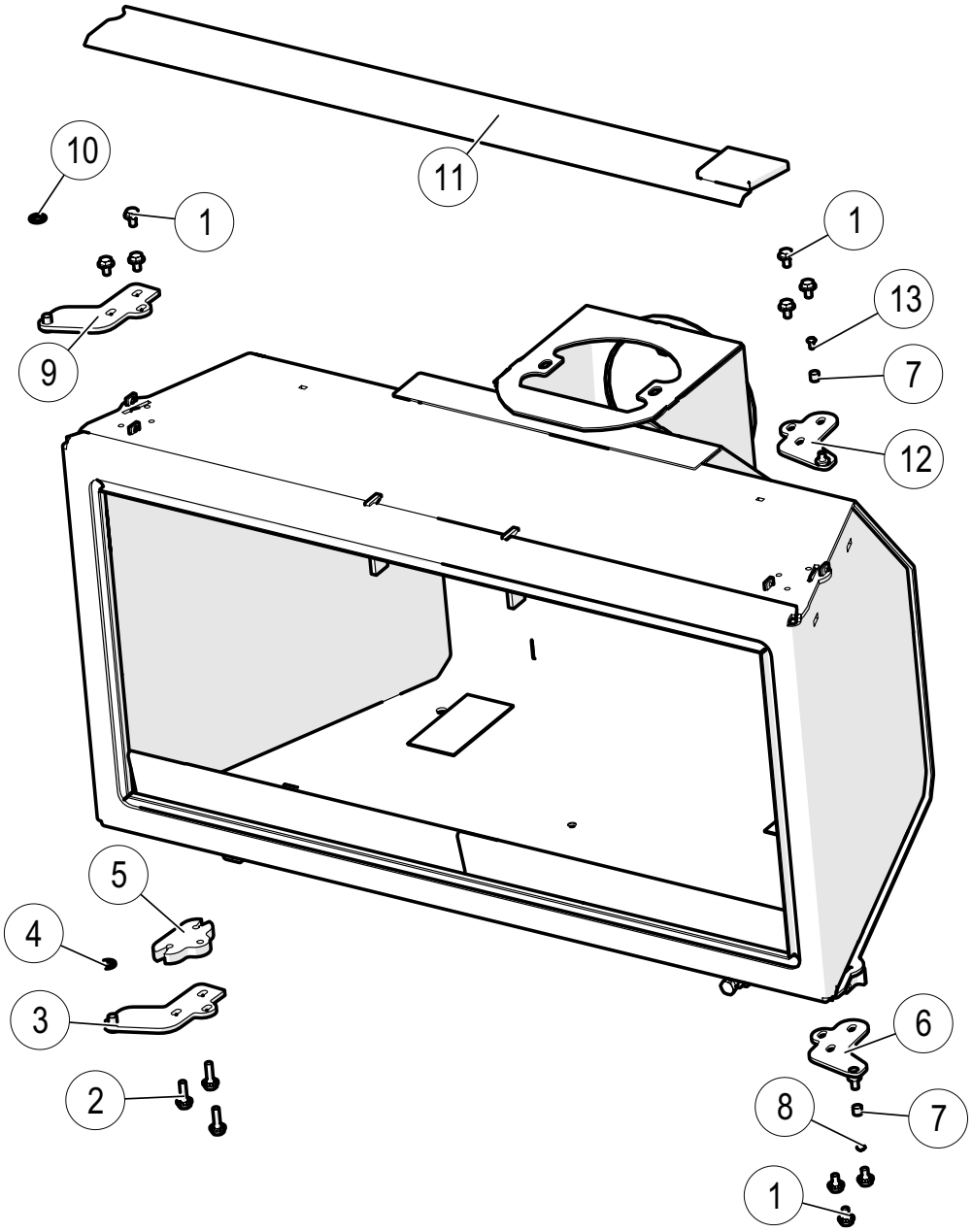

Living

Pos.	Number	Description	Qty
1	10689	Hex cap screw M8x30DIN933	1
2	12654	Nut M8 DIN 934 8.8	2

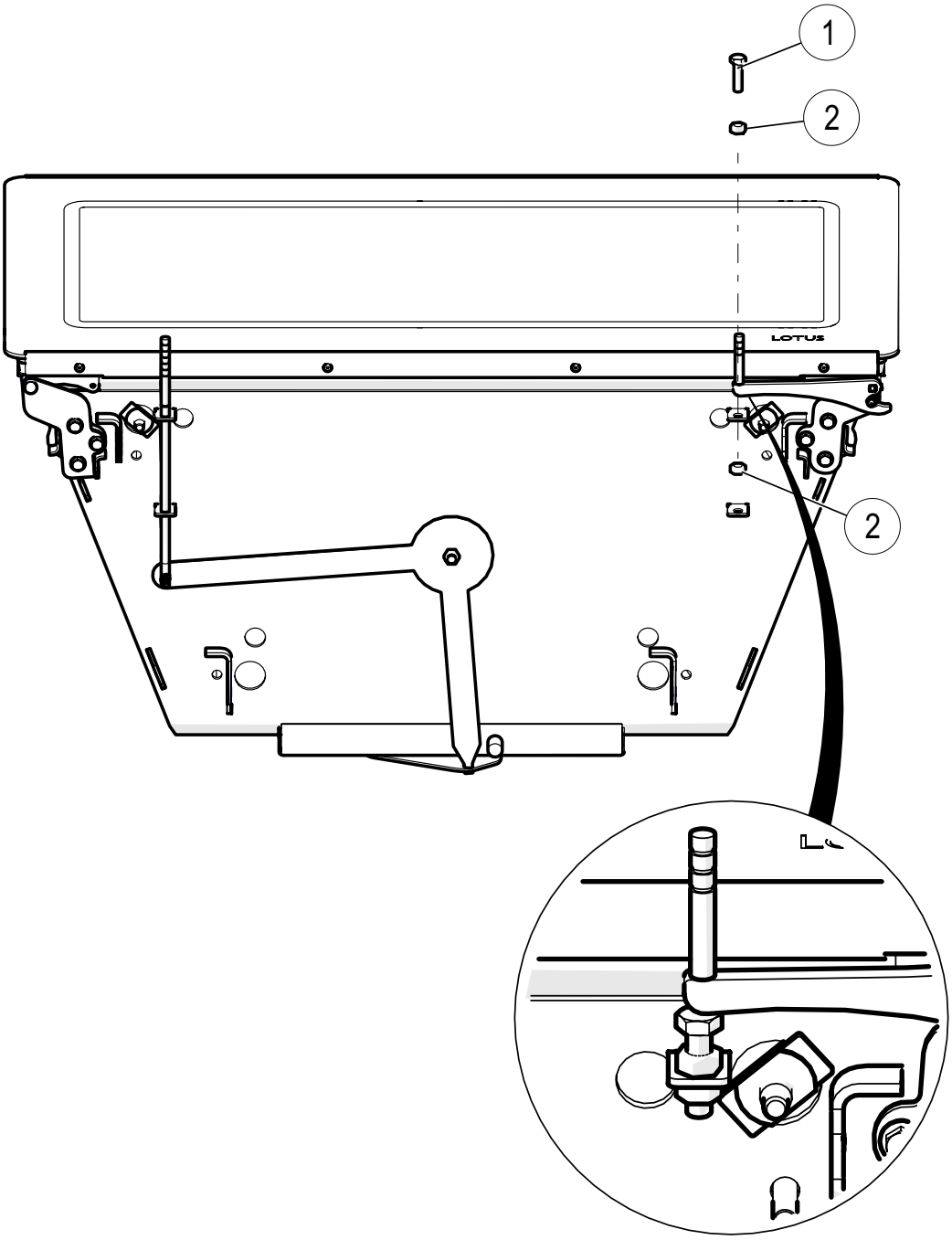

Living

Pos.	Number	Description	Qty
1	B-370840	Hex cap screw M8x40 DIN933	1
2	13682	Washer 8 mm DIN125A	1
3	13869	Clamping plate	1
4	12753	Seal	1
5	13190	Smoke box welded	1

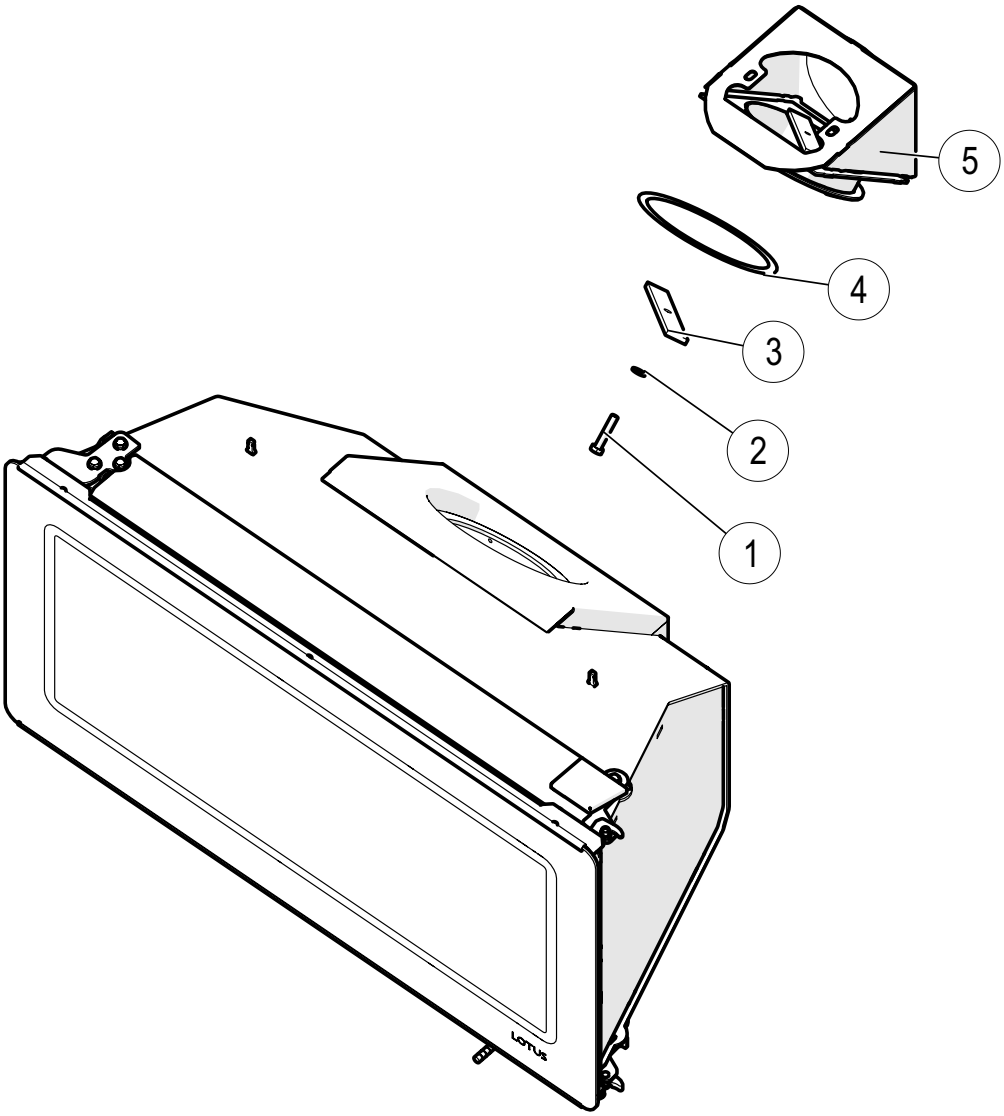

Living

Pos.	Number	Description	Qty
1	10548	Back plate welded	1
2	11340	Skrue M5x10 ISO 7380	5
3	14806/14808*	Outer box closed assembled	1
4	11627	Half base	1
5	13729	Button head screw M8 x 25	7
6	12987	Platic foot	4
7	12716	Adjustment part to half base	4
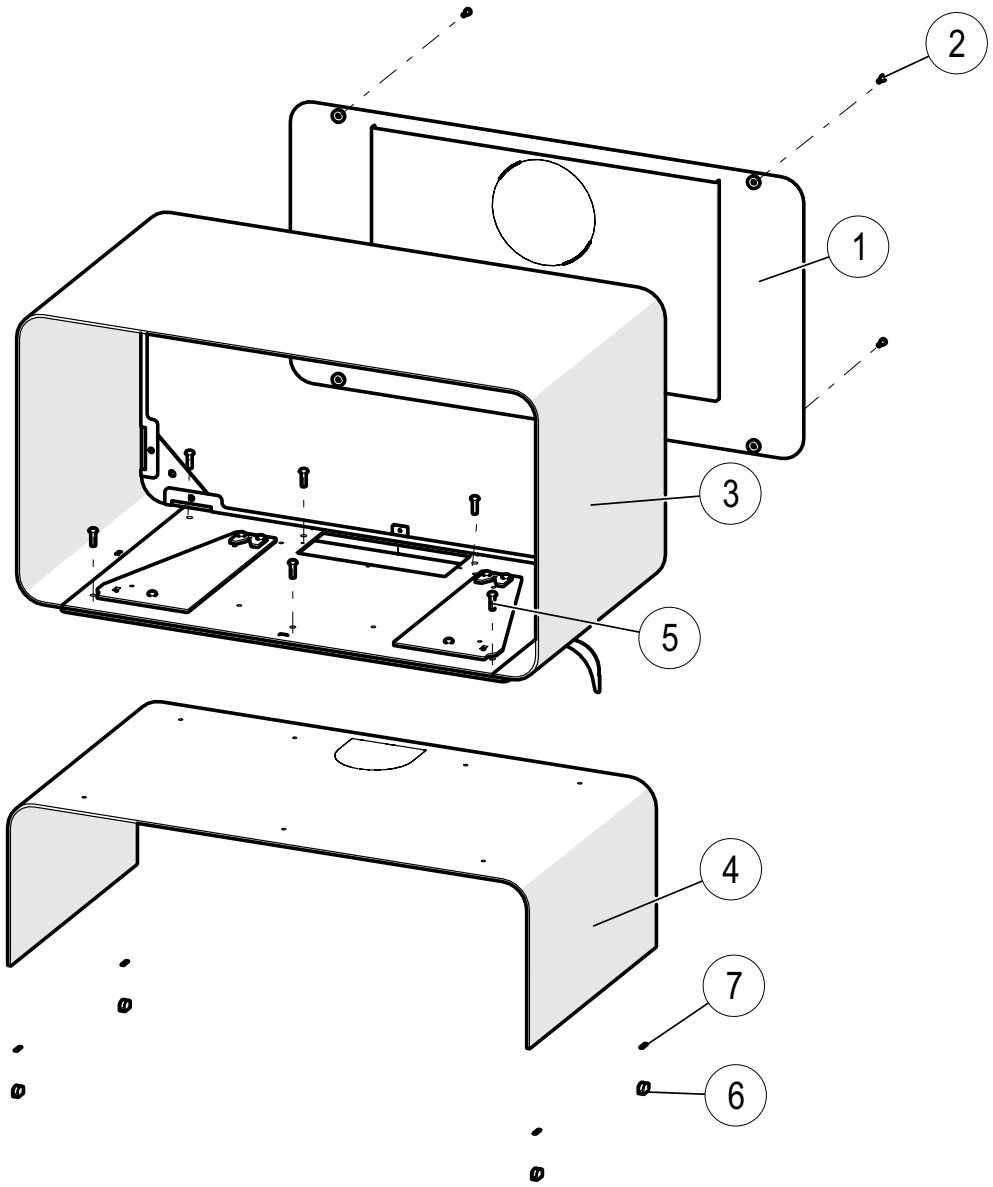
*depends on colour/style