Installation and usage instructions
Fireplace inserts, H370, H470, H470W
H570, H570T, H570W, H700, Unico

Version 1. 18.04.2024

Content

Introduction **4**
1 Installing your fireplace insert **4**
1.2 The substrate **5**
Mounting the smoke baffle plate 6
Distance to non-combustible material 6
Distance to combustible material 7
1.3 Safety distances to combustible materials **8**
***1.4* The chimney** **9**
1.5 Installation for ecoline models with catalytic converter **10**
1.6 Safety instructions **11**
1.7 Disposal of the packaging **12**
1.8 Disposal of fireplace insert parts **12**
***1.9* Combustion air supply** **12**
1.10 Chimney and dimensioning **13**
2 Recommended wood for fuel **13**
2.1 Firewood for ecoline models **14**
2.2 Wood for kindling **14**
3 Surface treatment at first ignition **14**
4 Operating the fireplace insert **14**
4.1 Firing up and loading wood **15**
5 Ash **16**
6 Good advice **16**
6.1 Maintenance of the fireplace insert **17**
6.2 Combustion chamber lining **17**
6.3 Glass panes **18**
6.4 Repair paint **18**
6.5 Maintenance/spare parts **18**
7 Malfunction **18**
8 What is included with the fireplace insert? **20**
9 Technical oven data **21**

Introduction

Dear Lotus customer. Congratulations on your new fireplace insert. We are pleased that you have chosen a quality product from Lotus.
Lotus has a long tradition and has been developing and manufacturing stoves since 1979. We place the highest demands on our products, and our fireplace inserts are characterised by the latest combustion technology, high-quality materials and manufacturing, and attractive design. The fireplaces are the result of good traditions combined with innovative thinking and have for years delighted their owners with faithful service.

We hope and believe it will bring you many warm moments. But before you can really enjoy your investment and to ensure that you enjoy your fireplace insert for many years to come, you should read this guide carefully. It contains important instructions and many useful tips. You'll also find some concrete advice on how to get the most out of your fireplace now and in the years to come. That's why it's always a good idea to save it like any other instruction manual.

The fireplace insert is designed for 'intermittent combustion'. This means that each relight is burned down to embers before relighting, which is achieved by following the instructions below:

1 Installing your fireplace insert

Before your new fireplace insert is ready to spread warmth and cosiness, you should read these pages carefully. Here we go through the requirements for assembly and installation. We also refer to the special assembly and installation instructions for the stove, which provides detailed instructions on how to assemble the entire insert in its individual parts.

Lotus recommends that the fireplace insert is installed by an authorised Lotus dealer or by an installer recommended by an authorised Lotus dealer.

Please also note that any air grilles must always be positioned so that they cannot be blocked.

The fireplace insert must be connected in accordance with applicable national and European standards and local regulations. To ensure this, you should contact your chimney sweep before installation. The chimney sweep or local authorities will also be able to inform you of the applicable local regulations and give you the necessary authorisation to use your insert when it is finally installed correctly. Remember - the insert must not be used before the installation has been notified, registered and authorised by the local authority/ chimney sweep. Outside the EU, different rules apply in some cases.

Building regulations and fire regulations must be observed. Lotus inserts are approved according to EN13229. For thermally insulated combustible walls, the installation standard DIN 18896 must be observed. If necessary, ask your chimney sweep for advice in advance.

Furthermore, please note that all applicable local regulations, including those referring to national and European standards, must be observed when installing the fireplace insert.

It should also be warned against any unauthorised modification of the fireplace insert, and it should be noted that the surfaces of the fireplace insert become hot.

Lotus recommends that the fireplace insert is installed by an authorised Lotus dealer or by a fireplace installer recommended by an authorised Lotus dealer. Remember - the fireplace insert must not be used until the installation has been approved by the local chimney sweep.

Note that any air grilles for convection air must be positioned so that they cannot be blocked or clogged. It is recommended to regularly inspect the grilles and clean them

The hole size required for mounting the fireplace insert is stated in the assembly instructions.

All H-fireplace inserts can be removed from the outer box by lifting it out of the track.
The knee pipe, which can go backwards or upwards, connects to the chimney.

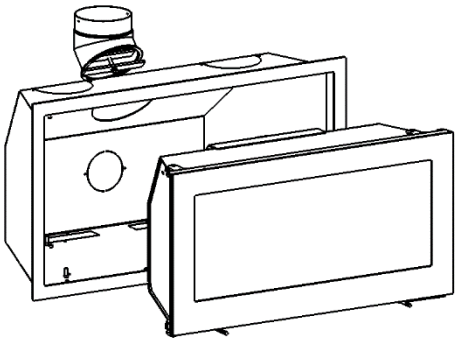

1.2 The substrate

The base must of course be solid and have sufficient load-bearing capacity. This will normally not be a problem when installing in an open fireplace.

For combustible flooring, the height of the insert base must be at least 300 mm.

Installation requirements /built-in

The possibilities for fireplace inserts are endless, they can be built into the wall, outside the wall and hung on the wall. However, they must only be installed in connection with non-combustible material. Virtually all installations

are individually designed and in all cases, the distance to combustibles must comply with the values listed below.

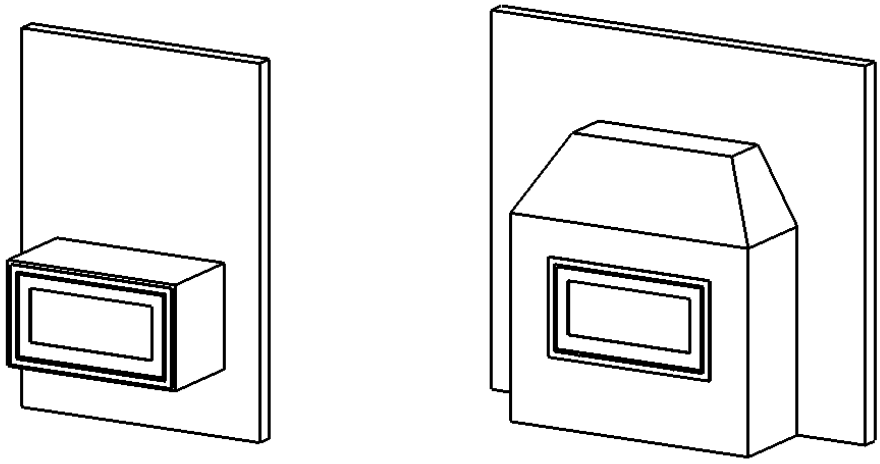

Mounting the smoke baffle plate

Below is shown how the smoke baffle plate should be placed, you can see a cut in the fireplace insert from the side.

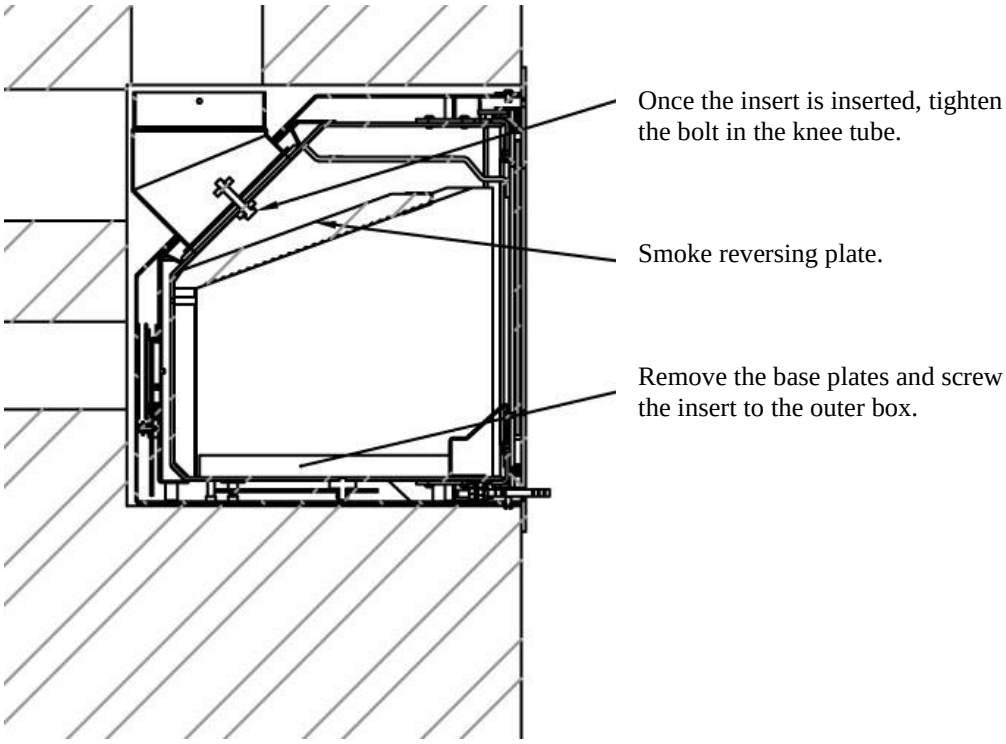

The smoke deflector plate is removed by lifting up on one side, then it can be released on the other side and taken down into the fire chamber and out of the door. Similarly, it is put back in place by sliding it up at an angle on one side and then on the other side and then putting it back in place in the centre.

Distance to non-combustible material

For non-combustible material there are no requirements.

Distance to combustible material

When the fireplace insert is installed in an existing masonry fireplace, the requirements for distance to combustible material and fire protection on the floor will usually be in order.
In the case of a new building, please refer to any local regulations on fire protection etc. Contact your chimney sweep for clarification of any doubts.

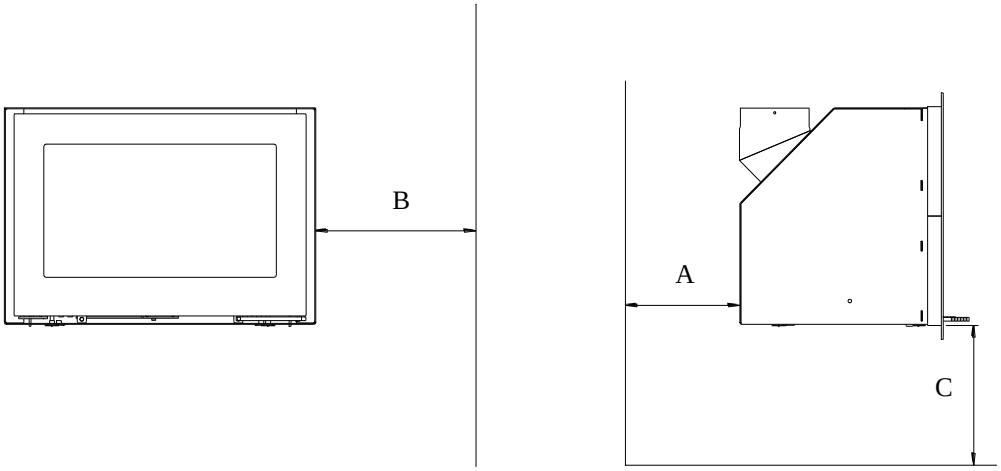

Installation/assembly in connection with combustibles.

When installing in connection with combustibles, the insert must be mounted in an enclosure
constructed from a steel frame clad with 25mm Skamol Superisol sheets
or a material with the same or better insulation performance. Minimum dimensions/distances are shown in the example below for a structure in non-combustible materials, in connection with combustibles.

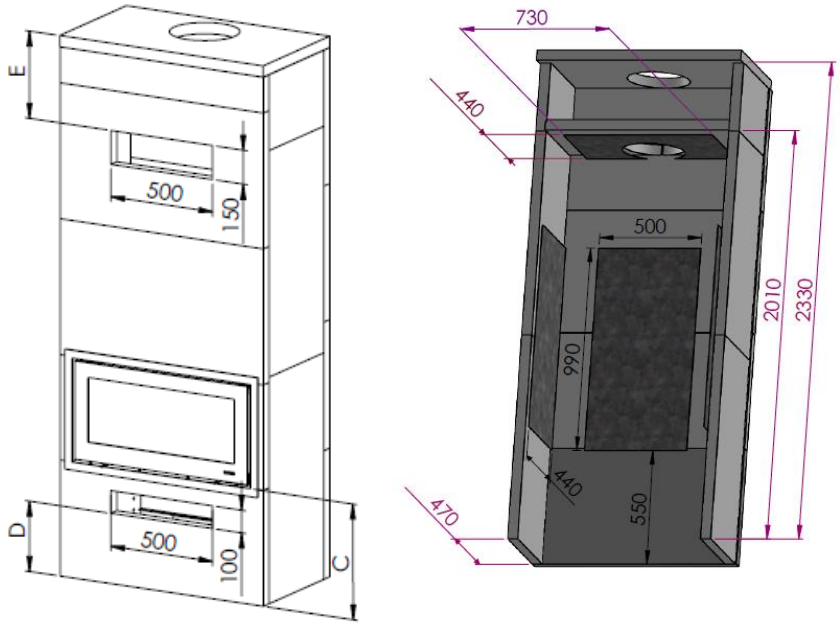

H-furnaces H570 with radiation shields

Unico 11, 12 and 13

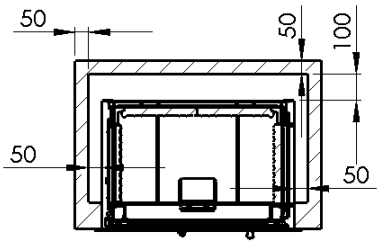

Insulation material: 50 mm Rockwool Brandbatts with smooth heat-resistant surface.
Or aerated concrete 100mm.

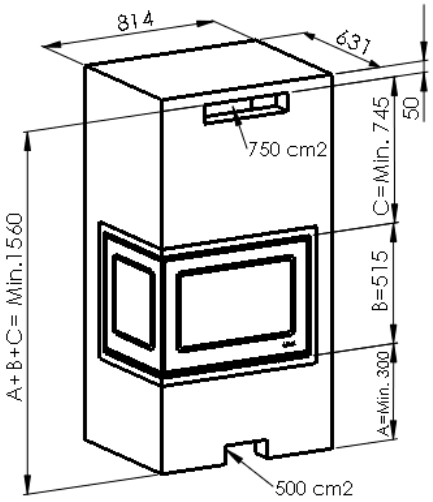

Unico 11/12

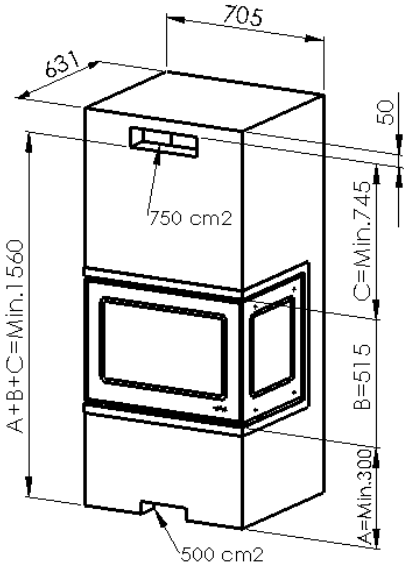

Unico 13

1.3 Safety distances to combustible materials

When placing your new fireplace insert in your home, special attention must be paid to distances to combustible material, such as flammable walls, furniture, etc. for safety reasons. The statutory safety test has established a number of minimum distances that are important to observe. The distances can be found in the technical data sheet for the stove at the back of this manual and on the type plate.

1.4 The chimney

A good draught in your chimney is crucial to how well a fireplace insert will burn. Note that there must be access to cleaning hatches.

The effective height of the chimney should typically be between 3.5 and 4.5 metres. Effective height is the distance from the top of the fireplace insert to the top of the chimney.

The chimney clearance must be min. Ø150 mm (internal dimension) in steel chimneys and min. Ø175-180mm in brick chimneys or chimneys made of ceramic elements, as their inner surface is often rough and offers resistance.

Naturally, all joints and connection points must be watertight and the chimney must have a minimum draft of 1.2mm water column (12 Pa).

1.5 Installation for ecoline models with catalytic converter

Lotus ecoline models come with a specially designed catalyst module and a 50 cm loose connection pipe as part of the stove to be installed by the stove fitter.

In general

The catalytic converters in Lotus fireplace inserts are characterised by a long service life and very effective emission reduction under the right conditions. To ensure their efficiency and function during their lifetime, attention must be paid to correct installation, handling, use and cleaning.

Unpacking and handling

The catalysts are a ceramic structure coated with an active layer consisting of a mixture of metal oxides and precious metals. The catalysts should only be touched with gloves, otherwise the active layer may be damaged and the catalyst's efficiency reduced.
Important: Catalysts are fragile and must be handled very carefully.
Avoid bumping and dropping the catalytic converter. This can damage the catalytic converter.

Installing the catalytic converter

The catalyst is integrated into the lower part of the knee pipe of your fireplace insert. It sits snug and protected in a tube in the perfect environment for the catalytic afterburning process. It is important to position the catalyst correctly to secure the gap for the required bypass.

Remove the catalytic converters from the transport packaging, remove the smoke deflector plate and carefully push the catalyser up the flue from below as shown in the picture.

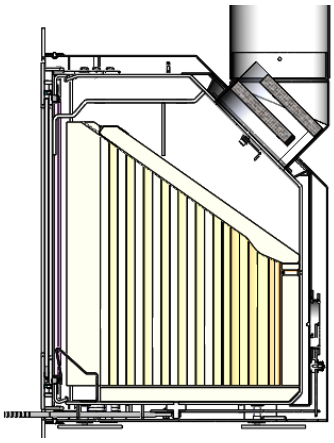

Catalyst installation in the flue.

Cleaning services
Depending on the operating time, fuel and user behaviour, the catalytic converter must be cleaned as coarse dust particles from the flue gases settle on the surface. These coarse dust particles must be regularly removed from the catalyst surface. As the user of the stove, you should regularly inspect the soiling of the catalyser and decide if cleaning is necessary. This is easy and can be done by any stove user.

Tools for cleaning.
To clean the catalytic converter, you can use a hand brush, paintbrush or the brush head of a vacuum cleaner.

Important:
A blocked catalyser no longer functions properly and should be cleaned or replaced before further use of the fireplace insert. It is therefore important that the catalyser is regularly checked by visual inspection.
For safety reasons, your ecoline stove is also equipped with a legally required bypass channel for the flue gases so that the fireplace insert can still get rid of the flue gases even if the catalyser becomes blocked.
Catalytic converters that are blocked with tar can no longer be cleaned and must be replaced.
Before sweeping the chimney and flue, remove the catalyser. Otherwise there is a risk that the catalyser will be damaged and clogged.

Operating time.
When fired correctly and under the right combustion conditions, the catalyst is very durable and robust in relation to the environment above the combustion chamber. With regular inspection and cleaning, the catalyst will last for at least 3 firing seasons without needing to be replaced.

1.6 Safety instructions

The surfaces of the fireplace insert become hot. Parts of the fireplace insert, especially the exterior surfaces, the door, the control handles and the glass pane become hot during operation! Appropriate caution must be exercised! Use suitable tools (1 glove is included in the scope of delivery).

1.7 Disposal of the packaging

Wood packaging: Send for recycling or disposal.
Stretch film/plastic film: Hand in for recycling or disposal.
Plastic bags: Hand in for recycling or disposal.

1.8 Disposal of fireplace insert parts

Steel/cast iron: Hand in for recycling or disposal.
Combustion chamber insulation: Hand in for disposal.
Packages: Send for disposal.
Glass: Dispose of as ceramic waste.
Catalyst:
At the end of its service life or if damaged, the catalytic converter must be replaced. However, the end-of-life catalytic converter does not have to be discarded and thrown away. The metals in the catalytic converter can be extensively reprocessed and reused. You can therefore return your used catalytic converter to your dealer at the same time as you buy a new one. Lotus will then take care of environmentally friendly and correct reprocessing.

1.9 Combustion air supply

It is important for good and clean combustion that sufficient air is supplied to the fire. For this to happen, however, it is a prerequisite that air is supplied to the room where the fireplace insert is installed.

In the vast majority of rooms there will be enough air, especially if some of the doors between rooms in the house are open. In special cases, it may be necessary to install an air vent in the outer wall of the room where the fireplace insert is installed. The air vents must be positioned so that they cannot be blocked.
Ensure that there is sufficient combustion air. If necessary, talk to your chimney sweep in advance if you need to calculate the air requirement for the stove's installation site and tell you how much extra air is still needed, if any.

Insufficient combustion air can negatively affect the chimney draught, and other equipment that uses air installed together with the fireplace insert in the same room or room air system (e.g. hoods or fans) can also negatively affect the function of the fireplace insert. In the worst case, it can affect your well-being and safety. In such cases, sufficient consideration must be given to the necessary air equalisation.
Your new fireplace also has the option to connect to external combustion air. This is particularly practical in modern buildings that are very airtight. The external connection only requires a separate duct connection to the outside air or the ventilation system's exhaust duct.

1.10 Chimney and dimensioning

A good draught in your chimney is crucial to how well a fireplace insert will burn. A well-dimensioned chimney not only determines how the flue gases can be led away from the fireplace, but also determines the supply of combustion air and thus how well your new fireplace will work overall. A chimney draft that is too small can make it difficult to light the fireplace and subsequently make it difficult to achieve efficient and environmentally friendly combustion. Conversely, too high a chimney draft can lead to excessive oxygen supply and combustion with the risk of negatively impacting efficiency and emission values. If the architecture of your building or the surrounding landscape makes it difficult to dimension the chimney, a mechanical draft control may be a solution. Ask your chimney sweep for advice.

The chimney of a Lotus fireplace insert must comply with temperature class T400 and the effective height should typically be around 4.5 metres. Effective height is the distance from the top of the fireplace to the top of the chimney. The chimney must be able to provide a draught of at least 12 Pa to achieve the best operation of the stove.

The cross-section of the chimney must be adapted to the fireplace. The clearance must be min. Ø150 mm (internal dimension) in steel chimneys and min. Ø175-180mm in masonry chimneys or chimneys made of ceramic elements, as their inner surface is often rough and offers resistance.

Naturally, all joints and connection points must be sealed and there must be access to the cleaning hatches in the chimney. If your chimney has a smoke damper, it must have a forced opening of at least 20 cm2.

Your Lotus fireplace insert is approved for connection to a chimney with multiple flues that is also used for multiple stoves or other purposes. The specific local conditions must be assessed by the installer and/or chimney sweep.

The chimney must be dimensioned in accordance with EN 13 13384-1 and 2 or the country-specific building regulations.

2 Recommended wood for fuel

Various hardwoods such as beech, birch, ash or fruitwood are very suitable as fuel.

Firewood for Lotus fireplace inserts is cut into lengths of about 30 cm or less and split to a thickness of about 7-9 cm. A maximum moisture content of 15-20% is very important for good combustion (optimal value is 15-17%). If the wood is too moist, the stove's performance drops sharply because part of the energy is used to vaporise the water content. The water vapour causes the temperature in the combustion chamber to drop sharply, allowing condensation to form in the flue pipes. The condensation causes rust to form in the flue, and dripping water and peat soot can also be a consequence. If the

wood is too dry, it burns too fast for the amount of air supplied and emits more particles than necessary.

It is not recommended to use firewood such as impregnated wood, chipboard, coloured leaflets or glossy paper that is not suitable for a Lotus fireplace insert. These develop acids or release heavy metals that can attack the metal surfaces in the firebox and cause corrosion. In addition, treated types of wood and paper will not burn completely and cleanly but release substances into the flue gas and ash that are harmful to the environment.

2.1 Firewood for ecoline models

Lotus ecoline fireplace inserts are catalytic fireplaces and therefore it is even more important to follow the recommendations for fuel selection. It is extremely important for the function of the fireplace and the most environmentally friendly use of the fireplace that you burn correctly and use the right recommended fuel. Be aware that burning resinous woods such as spruce and pine entails a higher risk of catalyst blockage. In this case, it is important to check and inspect the catalyser more frequently than usual.

2.2 Wood for kindling

Use small pieces of split wood of an easily flammable wood type as kindling (approx. 2 x 2 cm with a length of about 25 cm). This creates a rapid heating in the fireplace and builds up the first layer of embers for the next fires. It is important that the kindling is completely dry.

3 Surface treatment at first ignition

After installation and chimney sweep approval, your new stove can be fired up. Lotus fireplace inserts are factory-coated with a very robust and heat-resistant special paint. This treatment causes the stove to emit a special odour when the paint hardens during the first firing, but this will disappear after a short period of operation once the fireplace has been well heated. Therefore, do not touch the surface during the heating phase to avoid damage and discolouration of the surface. Ensure good ventilation and airing of the room during the first use of the fireplace insert.

4 Operating the fireplace insert

A Lotus fireplace insert is designed to be as easy as possible to light correctly. There are only a few settings that need to be operated when the fireplace is lit to get the most out of the fireplace. It's only the correct air setting and firewood loading that you need to focus on to use the stove correctly. The combustion air is adjusted with one handle located centrally under the door. The stove insert then distributes the air volume to primary air, raw/secondary air and tertiary air. Next, it is the preparation of the fire that is important. When refuelling with new firewood, follow the firing schedule, which can be found in the technical data section. Light the fire with the correct number of logs arranged in the bottom of the firebox according to the schedule - parallel, across, crosswise, etc. Before use, it must be cut and split to the correct size and dried to the correct moisture content.
Below is the procedure used for testing and approval of the fireplace by the accredited test institute.
It is this approach that, for the given chimney draft of 12 Pa, leads to the best

combustion, and if you fire in this way, you will experience the same fantastic heat and efficiency as well as the most environmentally friendly use of the fireplace. The amount of wood and the setting of the air damper are important and differ between stove types. The correct values are listed in the firing chart among the technical specifications at the back of this guide. However, the amount of wood and damper setting can be varied according to individual heating needs and the specific chimney draft for the installation in question. The fireplace insert is tested with beech and birch firewood with approximately 16-18% humidity.

4.1 Firing up and loading wood

It is recommended that ignition in a Lotus fireplace insert is done from above. Before lighting, open the air valve under the door to maximum by pulling out.

Place 2-3 small pieces of wood/blocks on the ash layer at the bottom of the firebox. Then place dry, finely split kindling on top of the lower pieces of wood in the centre of the firebox and build it up as a log layer as in the schematic example below. Finally, place a number of kindling blocks and wood wool on top of the top log layer.

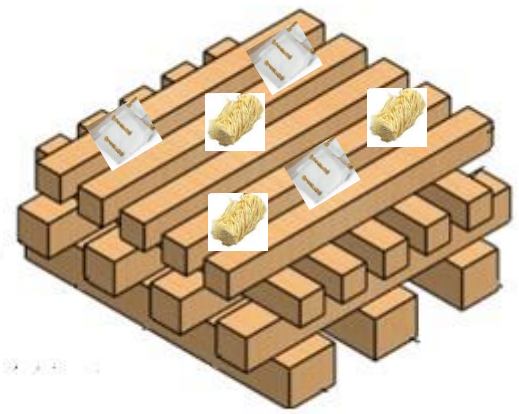

As a starting point, the door should be ajar, with an opening of about 3 cm. The door handle is used for this function. This ensures that the fire gets extra combustion air during the critical heating phase. Ignite the firelighters and leave the door ajar under supervision.

When the fire is burning and the glass pane is hot, you can close the door (approx. 5-10min).

When the fire has burned down to embers (no flames), prepare for the next firing. Take out the firewood according to the firing schedule and carefully open the oven door so that the ash does not swirl around. Spread the embers out in an even layer and place the next pieces of wood in the centre of the firebox. Then close the oven door.

Place the logs close together at the bottom. The pieces will ignite best if they have one split side facing the door and one down in the embers. Close the door completely immediately.

Open the damper fully and wait about 4 minutes until the wood is well lit and adjust the air slide to the centre position. How far you need to push the air slide in depends on the chimney draft, but the flames should now stabilise into a steady burning fire. However, there should always be a "lively" flame in the firebox.

Once the fire has burned down to embers (no flames), relight the fire as described above.

Slow combustion
Place a good amount of firewood (1.5-2kg divided between 2 pieces of firewood) on a reasonable layer of embers and when the fire is well established, turn down the air. Never turn down the air more than the flames are still clear and steady. When this fire has burned down to embers, the period until the next firing can be further extended by closing the damper completely so that no cold air is drawn through the stove.
If the air supply is regulated down too early or is generally too small, it leads to poor efficiency and excessive emissions that harm the environment.

5 Ash

There should always be some ash in the firebox. The fire burns better if it is covered in a layer of ash. The ash causes the embers to accumulate faster and the embers last longer. Lotus recommends that the ash is removed after the 10th burning process at the earliest. The ash can be thrown in the rubbish bin when it has completely cooled down. Ash should always be cooled for at least 1-2 days before being thrown in the bin, otherwise there may still be embers that can ignite waste or rubbish bags.

6 Good advice

Over time, after using the fireplace insert a few times, you will get better and more experienced at firing and heating your home with your Lotus fireplace. We have compiled a number of tips and guidelines to help you maintain and enjoy your fireplace for many years to come.

Cleaning the fireplace insert

All Lotus fireplace inserts are surface treated at the factory with original Senotherm lacquer in the colour 'charcoal' or 'grey'. This treatment causes the fireplace insert to emit a specific odour during the first few fires, but this will disappear after a few times. Ensure good ventilation. Maintain the surface by brushing it with a soft, long-haired car brush. Do not use a cloth with water or anything else.

The inside of the insert should also be cleaned regularly. Ash, soot and any tar residue should be removed from the window and combustion chamber. Smoke deflector plates should also be removed regularly to remove soot and dirt, which will often accumulate behind the plates. Check that there is a clear passage to the chimney. Ash from the insert may contain embers long after the insert was last used, so always place the ash in a fireproof bucket before disposal. Remember that the fireplace should only be cleaned when cold.

All Lotus fireplaces are coated with robust heat-resistant paint, but solvents can damage the paint.

6.1 Maintenance of the fireplace insert

Gaskets
Gaskets on doors and glass panes wear out. They may look nice at first glance, but they collapse over time, especially under thermal stress, and lose their ability to keep the stove sealed. Gaskets should be replaced as needed, as a tight seal is essential for good combustion and a clean glass pane.

Lotus recommends that you check the seals regularly, but at least once a year, and have them replaced by your dealer if necessary. (Seals are wearing parts and are not covered by warranty).

6.2 Combustion chamber lining

The sides of the firebox are lined with mineral plates to protect the steel structure of the fireplace, ensure a high and efficient combustion temperature and contribute to the optimal distribution of combustion air. The cladding can crack or become worn when overloaded. The plates are made of vermiculite, which is an insulating material. The cladding is brittle and small cracks and flaking may occur over time when using the fireplace. These minor cracks in the firebox cladding do not impair the function of the fireplace. In case of heavy wear, the material should be replaced at the latest when the plates have a thickness of approx.
1.5 cm.
The vermiculite material is slightly porous. To avoid damaging or breaking the panels, it is important that the firewood is not thrown, but placed in the centre of the firebox without touching the side cladding. If you accidentally break a plate, it has no effect on the insulating effect of the plate. Spare parts kits for the combustion chamber lining are available from your Lotus dealer.

However, burning too much or the wrong fuel can damage the cladding, and the cladding can also crack if a log or other object is pushed hard into the cladding.
The mineral vermiculite insulation will change colour when heated strongly. The colour spectrum is shown below. If the vermiculite has been exposed to particularly heavy loads, it may change colour and become reddish. However, the material retains its insulating properties.

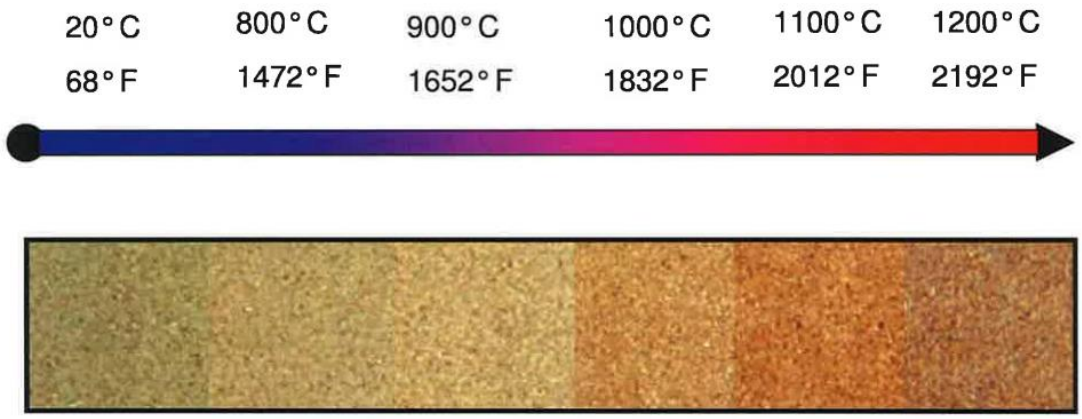

The combustion chamber lining is a wearing part and is not covered by warranty. It must be replaced if it is burnt through or has loose flakes. Contact your dealer for more information about original spare parts for your Lotus fireplace.

6.3 Glass panes

The glass panes of the oven are made of special ceramic glass. The glass pane is therefore highly heat-resistant.
When the fireplace is lit correctly, the special pane rinsing function automatically cleans the glass pane and the fireplace ensures that the glass remains clear and transparent so that the flames of the fire can be enjoyed. However, outside of normal use, e.g. during lighting or when the fire goes out, where the temperature is low and thus the supply of combustion air is low, soot deposits may form on the glass. When the fireplace is cold, the glass can be cleaned with a soft cloth.
During the special production process, micro-bubbles can form in the glass in special cases and do not constitute a quality defect.
(The glass pane is not covered by warranty).
The glass pane must not be disposed of with normal glass waste.
(must be disposed of as ceramic waste).

6.4 Repair paint

Repairing your fireplace with spray paint can cover stains or small scratches from objects or other damage. Larger damage should be sanded down with fine steel wool, vacuumed and then sprayed. The can should be shaken vigorously and spray painted with a distance of 15-20 cm. It is very important that the stove is out of operation and completely cold before using the spray, otherwise major damage can occur due to fire hazard. The original special paint is available as a repair spray from your local Lotus dealer.

6.5 Maintenance/spare parts

Maintenance/spare parts, especially moving parts, can become worn with frequent use. Only original spare parts may be used. At the end of a heating period, we recommend that you have the fireplace serviced by your Lotus dealer.

Treat all moving parts (hinges and locking mechanism) with a heat-resistant lubricant at least once a year. This will extend the life of the moving parts and ensure they function smoothly.

7 Malfunction

If you are experiencing problems with your Lotus fireplace, the cause in some of the most common cases can be found below.

The fireplace is difficult to get burning and may go out
There can be a number of reasons for this. The most typical are:
The damper is not open enough.
The firewood is too wet.
The draught in the chimney is too low, it may be clogged or leaking.

The ember layer was too small/annealed and did not provide enough heat to ignite the logs
Depending on the problem, it may be necessary to contact your Lotus dealer or a chimney sweep.

The fireplace is hard to control - it burns too fast
If the fireplace is new, check that you have followed the operating instructions and set the air control correctly. If the stove is more than 1 year old or has been used a lot, you may need to replace the seals. You can also check if the top smoke deflector plates are correctly positioned and pushed all the way back?

Fireplace draws poorly after installation
Check that the installation instructions have been followed and the smoke baffle plates are positioned correctly. There may also be problems with the chimney. Is the diameter and length as recommended? Is the chimney cross-section clear? Are the flue pipes and transitions clear? Is there a smoke damper in the chimney that needs adjusting? It may be necessary to contact the chimney sweep to solve the problem.

There is a smell of smoke and soot
This can be caused by wind falling into the chimney and can occur in certain weather conditions. The chimney does not have the prescribed effective height or there are taller trees or buildings in the immediate vicinity of the chimney. Is there sufficient combustion air?

If windows and doors are tightly closed, it can lead to negative pressure in the room, which means that the air supply is not guaranteed, which greatly impairs the chimney's draught ability. If the chimney has previously been connected to another type of stove with a different fuel type (oil, coke etc.), older soot residues in the chimney may continue to emit strong odours.

An extractor hood on the exhaust air in the same room or a room air connection can lead to a very high negative pressure in the room, causing flue gases to be sucked into the room. It is therefore mandatory to provide a safety device to ensure that there is always sufficient combustion air in the room.

Heating during the transition period
From an outside temperature of about 15 degrees and above, your stove may malfunction. The small temperature differences lead to a reduced draft in your chimney. This can result in poor ignition behaviour, unsatisfactory combustion, increased flue gas formation with sooting of the glass and smoke escaping when the stove door is opened.

Note in case of a chimney fire
If incorrect or too moist fuel is used, a chimney fire may occur due to deposits in the chimney. Close all air vents in the chimney immediately and notify the fire department. Once the chimney has burned out, it should be checked by a professional for cracks and leaks.

Special instructions
If the fireplace insert is overloaded significantly beyond the rated heat output or if fuels other than those specified are used, the manufacturer's warranty is void.

8 What is included with the fireplace insert?

Depending on the fireplace model selected, different accessories and equipment are included to be used for set-up and installation. All fireplaces come with installation and operating instructions, a mounting kit for connecting the flue pipe and a glove.

Safety distances to combustible materials

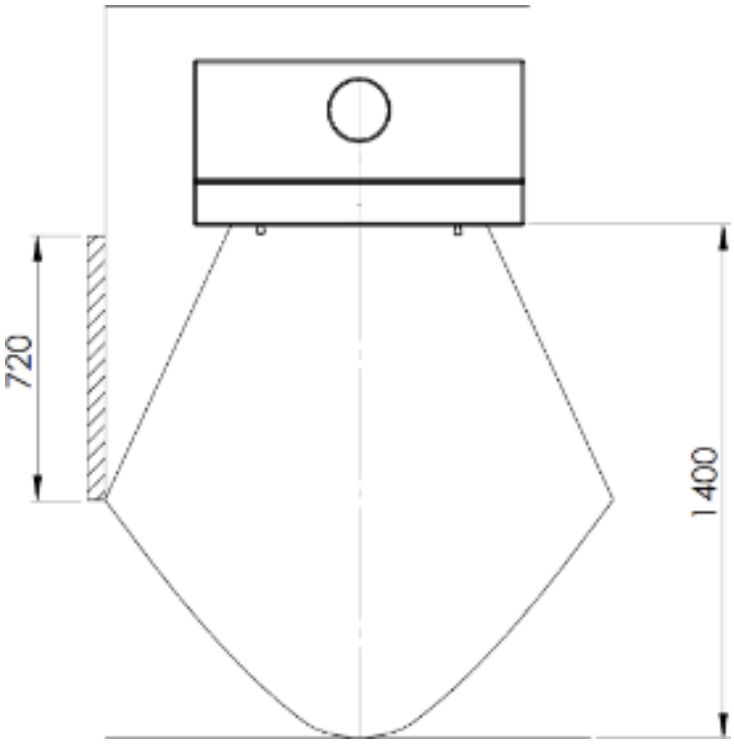

Note: There must be no flammable materials within the shaded area.

9 Technical oven data

H370

Technical data					Safety distances to flammables			
Type	**Height mm**	**Width mm**	**Depth mm**	**Weight kg**	**A mm**	**B mm**	**C mm**	**Front mm**
H370	470	685	340	87	100	50	300	1400

Form for calculation of chimney

Type	Smoke draft PA	Flue gas mass flow (g/s)	Flue gas Temperature	Efficiency %	Nominal power output kW
H370	12	5,5	302°	77	5,8

Firing schedule

Amount of ignition and refuelling	
Kindling firewood	**Wood**
1.5kg	1.3kg

Setting the air damper

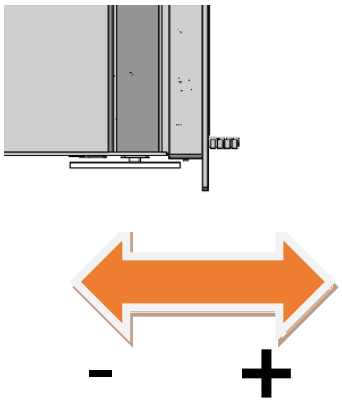

Supplier or brand name	***Lotus***	**Notes**
Model identity	***H370***	
Energy efficiency class	***A***	
Direct heat output	***5.8 kW***	*rated power at EN test*
Energy Efficiency Index (EEI)	***102,7***	*Calculation with EEI calculator²*
Efficiency at nominal heat output	*77 %*	*Efficiency according to EN 13229*
Specific precautions to be taken when assembling, installing or maintaining the local space heater product.	*Selected examples:* *- Fire protection and safety distances, such as distances to combustible materials, must be observed!* *- An adequate supply of combustion air to the fireplace must be guaranteed.*	

Declaration of conformity

This manufacturer's declaration confirms the compliance with the requirements of Regulation (EU) 2015/1185 and the notification in the Official Journal 2017 / C 076/02 of the European Commission.

Manufacturer	Lotus Heating Systems A/S, Agertoften 6, 5550 Langeskov, Denmark +45 63237070
Product type	Room heater for solid fuel (wood logs only)
Model identifier	Lotus H370 Small
Documentation	www.lotusstoves.com
Requests	EN 13 229 2001/A2 2004/AC 2007

EU Union legislation:

	Reference	Date	Title
Top level directives and regulations			
	DIR 2009/125/EC	21/10/2009	Energy Related Products Directive (ecodesign)
	REG (EU) 305/2011	9/3/2011	Construction Products Regulation (CPR)
	REG (EU) 2017/1369	4/7/2017	Energy Labelling Regulation
Implementation measures incl regulations and delegated acts			
	(EU) 2015/1186 (EL)	24/4/2015	Energy labelling delegated act on Room heaters
	(EU) 2015/1185 (ED)	24/4/2015	Ecodesign regulation on Room heaters
	2017/C 076/02	10/3/2017	COM Transitional methods OJ EU C76 Vol 60
Harmonised standards, other standards and technical specifications			
	EN 13240:2001	7/4/2001	Room heaters fired by solid fuel
	EN 13240/A2:2004	28/10/2004	Harmonisation of EN13240 by Annex ZA
	prEN 16510-1 (2013 ed)	January 2013	Emission measurement methods prior to 2018
	CEN/TS 15883	8/9/2009	Emission measurement from 2009
	EN 16510-1:2018	31/7/2018	Emission measurement methods 2018 onwards

Limit values:

This manufacturer declares the present room heater is in compliance with the limit values of the EU regulations.

η_s [%] Seasonal Heating efficiency	CO [mg/m^3] (13% O_2)	PM [mg/m^3] (13% O_2)	NOx [mg/m^3] (13% O_2)	C_{OGC} [mg/m^3] (13% O_2)
≥65%	≤1500	≤40	≤200	≤120

Date: 29/01-2024

Lars U. Borch
Lotus Heating Systems A/S

H470

Technical data					Safety distances to flammables					
Type	Height mm	Width mm	Depth mm	Weight kg	A mm	B mm	C mm	D mm	E mm	Front mm
H470	470	685	440	95						1400

Chimney calculation form

Type	Smoke draft PA	Flue gas mass flow (g/s)	Flue gas Temperature	Efficiency %	Nominal power output kW
H470	12	5,3	320°	84	6

Amount of ignition and refuelling	
Kindling firewood	Wood
2kg	1.5-2.5kg

Setting the air damper

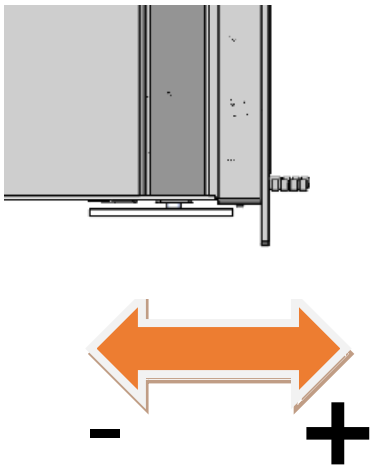

Other data

Supplier or brand name	*Lotus*	Notes
Model identity	***H470***	
Energy efficiency class	***A+***	
Direct heat output	***6 kW***	*rated power at EN test*
Energy Efficiency Index (EEI)	***112,8***	*Calculation with EEI calculator*[2]
Efficiency at nominal heat output	***84 %***	*Efficiency when tested according to EN 13229*
Specific precautions to be taken when assembling, installing or maintaining the local space heater product.	**Selected examples:** *- Fire protection and safety distances, such as distances to combustible materials, must be observed!* *- An adequate supply of combustion air to the fireplace must be guaranteed.*	

Conformity assessment

This assessment confirms compliance with the requirements of the EU regulation 2015/1185 and the announcement in the official journal of the European Commission 2017/C 076/02.

Manufacturer	Lotus Heating Systems A/S, Agertoften 6, 5550 Langeskov, Denmark +45 63237070
Product type	Freestanding stove for logs
Type designation	Lotus H470
Documentation	www.lotusstoves.com
Directives	EN 13229 2001/A2 2004/AC 2007

EU Union legislation

	Reference	Date	Title
Top level directives and regulations			
	DIR 2009/125/EC	21/10/2009	Energy Related Products Directive (ecodesign)
	REG (EU) 305/2011	9/3/2011	Construction Products Regulation (CPR)
	REG (EU) 2017/1369	4/7/2017	Energy Labelling Regulation
Implementation measures incl regulations and delegated acts			
	(EU) 2015/1186 (EL)	24/4/2015	Energy labelling delegated act on Room heaters
	(EU) 2015/1185 (ED)	24/4/2015	Ecodesign regulation on Room heaters
	2017/C 076/02	10/3/2017	COM Transitional methods OJ EU C76 Vol 60
Harmonised standards, other standards and technical specifications			
	EN 13240:2001	7/4/2001	Room heaters fired by solid fuel
	EN 13240/A2:2004	28/10/2004	Harmonisation of EN13240 by Annex ZA
	prEN 16510-1 (2013 ed)	January 2013	Emission measurement methods prior to 2018
	CEN/TS 15883	8/9/2009	Emission measurement from 2009
	EN 16510-1:2018	31/7/2018	Emission measurement methods 2018 onwards

Limit values

η_s[%] Annual effect degree	CO[mg/m $]^3$ (13% O_2)	PM[mg/m $]^3$ (13% O_2)	NOx[mg/m $]^3$ (13% O_2)	C_{OGC} [mg/m $]^3$ (13% O_2)
≥65%	≤1500	≤40	≤200	≤120

Date: 23/12-2021

Lars U. Borch **Lotus Heating Systems A/S**

H470W

Technical data					Safety distances to flammables			
Type	Height mm	Width mm	Depth mm	Weight kg	A mm	B mm	C mm	Front mm
H470W	470	897	440	120	250	350	300	1400

Chimney calculation form

Type	Smoke draft PA	Flue gas mass flow (g/s)	Flue gas Temperature	Efficiency %	Nominal power output kW
H470W	12	6,8	315°	80,5	7

Amount of ignition and refuelling	
Kindling firewood	Wood
2kg	1.5-2.5kg

Setting the air damper

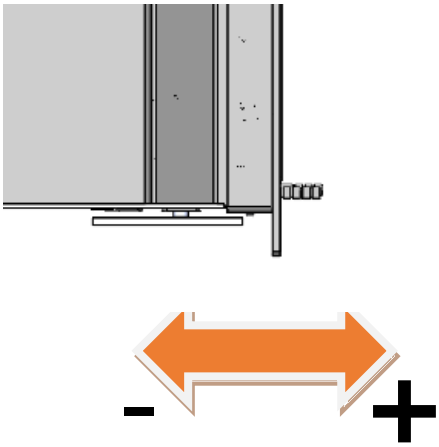

Data sheet

Supplier or brand name	*Lotus*	Notes
Model identity	***H470W***	
Energy efficiency class	***A+***	
Direct heat output	***7 kW***	*rated power at EN test*
Energy Efficiency Index (EEI)	***107,7***	*Calculation with EEI calculator²*
Efficiency at nominal heat output	***80,5 %***	*Efficiency according to EN 13229*
Specific precautions to be taken when assembling, installing or maintaining the local space heater product.	*Selected examples:* *- Fire protection and safety distances, such as distances to combustible materials, must be observed!* *- An adequate supply of combustion air to the fireplace must be guaranteed.*	

Declaration of conformity

This manufacturer's declaration confirms the compliance with the requirements of Regulation (EU) 2015/1185 and the notification in the Official Journal 2017 / C 076/02 of the European Commission.

Manufacturer	Lotus Heating Systems A/S, Agertoften 6, 5550 Langeskov, Denmark +45 63237070
Product type	Room heater for solid fuel (wood logs only)
Model identifier	Lotus H470W
Documentation	www.lotusstoves.com
Requests	EN 13229 2001/A2 2004/AC 2007

EU Union legislation:

	Reference	Date	Title
Top level directives and regulations			
	DIR 2009/125/EC	21/10/2009	Energy Related Products Directive (ecodesign)
	REG (EU) 305/2011	9/3/2011	Construction Products Regulation (CPR)
	REG (EU) 2017/1369	4/7/2017	Energy Labelling Regulation
Implementation measures incl regulations and delegated acts			
	(EU) 2015/1186 (EL)	24/4/2015	Energy labelling delegated act on Room heaters
	(EU) 2015/1185 (ED)	24/4/2015	Ecodesign regulation on Room heaters
	2017/C 076/02	10/3/2017	COM Transitional methods OJ EU C76 Vol 60
Harmonised standards, other standards and technical specifications			
	EN 13240:2001	7/4/2001	Room heaters fired by solid fuel
	EN 13240/A2:2004	28/10/2004	Harmonisation of EN13240 by Annex ZA
	prEN 16510-1 (2013 ed)	January 2013	Emission measurement methods prior to 2018
	CEN/TS 15883	8/9/2009	Emission measurement from 2009
	EN 16510-1:2018	31/7/2018	Emission measurement methods 2018 onwards

Limit values:

This manufacturer declares the present room heater is in compliance with the limit values of the EU regulations.

η_s [%] Seasonal Heating efficiency	CO [mg/m^3] (13% O_2)	PM [mg/m^3] (13% O_2)	NOx [mg/m^3] (13% O_2)	C_{OGC} [mg/m^3] (13% O_2)
≥65%	≤1500	≤40	≤200	≤120

Date: 29/1-2024

Lars U. Borch,
Lotus Heating Systems A/S

H570

Technical data					Safety distances to flammables					
Type	Height mm	Width mm	Depth mm	Weight kg	A mm	B mm	C mm	D mm	F mm	Front mm
H570	575	685	440	111			510	310	380	1400

Chimney calculation form

Type	Smoke draft PA	Flue gas mass flow (g/s)	Flue gas Temperature	Efficiency %	Nominal power output kW
H570	12	5,1	292°	84	6

Amount of ignition and refuelling	
Kindling firewood	**Wood**
2kg	1.5-2.5kg

Setting the air damper

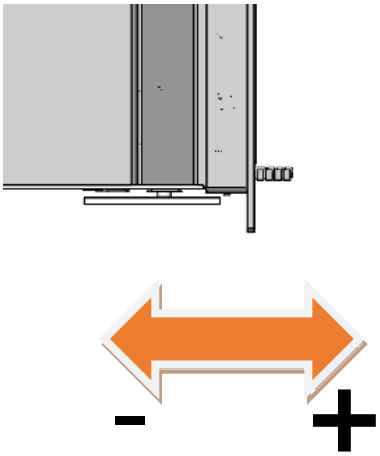

Data sheet

Supplier or brand name	*Lotus*	Notes
Model identity	***H570***	
Energy efficiency class	***A+***	
Direct heat output	***6 kW***	*rated power at EN test*
Energy Efficiency Index (EEI)	***112,8***	*Calculation with EEI calculator²*
Efficiency at nominal heat output	***84 %***	*Efficiency according to EN 13229*
Specific precautions to be taken when assembling, installing or maintaining the local space heater product.	**Selected examples:** *- Fire protection and safety distances, such as distances to combustible materials, must be observed!* *- An adequate supply of combustion air to the fireplace must be guaranteed. Air extraction systems can interfere with the combustion air supply!*	

H570 ecoline

Technical data					Safety distances to flammables					
Type	**Height mm**	**Width mm**	**Depth mm**	**Weight kg**	**A mm**	**B mm**	**C mm**	**D mm**	**F mm**	**Front mm**
H570 ecoline	575	685	440	111			510	310	380	1400

Chimney calculation form

Type	Smoke draft PA	Flue gas mass flow (g/s)	Flue gas Temperature	Efficiency %	Nominal power output kW
H570 ecoline	12	4,6	196°	86,4	6

Optimal firing schedule

H570 ecoline	Ignition	Pre-firing	Pre-firing	Firing	Firing	Firing
Firewood in kg.	3,2	2,47	1,38	1,39	1,39	And so on.
Damper setting	100% open (55mm)	40 mm after 1:30 min	26 mm after 1:30 min	23 mm after 1:30	23 mm from start	And so on.
Tree position and length	20 cm	25 cm	25 cm	22 cm	22 cm	

Air damper setting

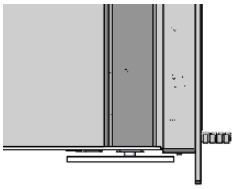

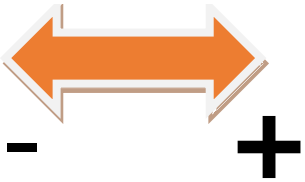

Other data Supplier or brand name	***Lotus***	**Notes**
Model identity	***H570 ecoline***	
Energy efficiency class	***A+***	
Direct heat output	***6 kW***	*rated power at EN test*
Energy Efficiency Index (EEI)	***116,3***	*Calculation with EEI calculator²*
Efficiency at nominal heat output	***86,4 %***	*Efficiency when tested according to EN 13229*
Specific precautions to be taken when assembling, installing or maintaining the local space heater product.	**Selected examples:** *- Fire protection and safety distances, such as distances to combustible materials, must be observed!* *- An adequate supply of combustion air to the fireplace must be guaranteed.*	

Declaration of conformity

This manufacturer's declaration confirms the compliance with the requirements of Regulation (EU) 2015/1185 and the notification in the Official Journal 2017 / C 076/02 of the European Commission.

Manufacturer	Lotus Heating Systems A/S, Agertoften 6, 5550 Langeskov, Denmark +45 63237070
Product type	Room heater for solid fuel (wood logs only)
Model identifier	Lotus H570 ecoline
Documentation	www.lotusstoves.com
Requests	EN 13 229 2001/A2:2004/AC:2007

EU Union legislation:

	Reference	Date	Title
Top level directives and regulations			
	DIR 2009/125/EC	21/10/2009	Energy Related Products Directive (ecodesign)
	REG (EU) 305/2011	9/3/2011	Construction Products Regulation (CPR)
	REG (EU) 2017/1369	4/7/2017	Energy Labelling Regulation
Implementation measures incl regulations and delegated acts			
	(EU) 2015/1186 (EL)	24/4/2015	Energy labelling delegated act on Room heaters
	(EU) 2015/1185 (ED)	24/4/2015	Ecodesign regulation on Room heaters
	2017/C 076/02	10/3/2017	COM Transitional methods OJ EU C76 Vol 60
Harmonised standards, other standards and technical specifications			
	EN 13240:2001	7/4/2001	Room heaters fired by solid fuel
	EN 13240/A2:2004	28/10/2004	Harmonisation of EN13240 by Annex ZA
	prEN 16510-1 (2013 ed)	January 2013	Emission measurement methods prior to 2018
	CEN/TS 15883	8/9/2009	Emission measurement from 2009
	EN 16510-1:2018	31/7/2018	Emission measurement methods 2018 onwards

Limit values:

This manufacturer declares the present room heater is in compliance with the limit values of the EU regulations.

η_s [%] Seasonal Heating efficiency	CO [mg/m^3] (13% O_2)	PM [mg/m^3] (13% O_2)	NOx [mg/m^3] (13% O_2)	C_{OGC} [mg/m^3] (13% O_2)
≥65%	≤1500	≤40	≤200	≤120

Date: 29/01-2024

Lars U. Borch
Lotus Heating Systems A/S

H570T

Technical data					Safety distances to flammables			
Type	Height mm	Width mm	Depth mm	Weight kg	A mm	B mm	C mm	Front/rear mm
H570T	575	685	590	155	-	500	300	800

Chimney calculation form

Type	Smoke draft PA	Flue gas mass flow (g/s)	Flue gas Temperature	Efficiency %	Nominal power output kW
H570T	12	5,3	310°	80,5	6

Firing schedule Setting the air damper

Amount of ignition and refuelling	
Kindling firewood	Wood
2-2.5kg	2-2.5kg

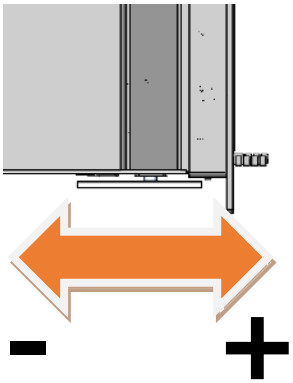

Other data

Supplier or brand name	*Lotus*	Notes
Model identity	H570T	
Energy efficiency class	A+	
Direct heat output	6 kW	*rated power at EN test*
Energy Efficiency Index (EEI)	107,7	*Calculation with EEI calculator²*
Efficiency at nominal heat output	80,5%	*Efficiency according to EN 13229*
Specific precautions to be taken when assembling, installing or maintaining the local space heater product.	**Selected examples:** *- Fire protection and safety distances, such as distances to combustible materials, must be observed!* *- An adequate supply of combustion air to the fireplace must be guaranteed.*	

Declaration of conformity

This manufacturer's declaration confirms the compliance with the requirements of Regulation (EU) 2015/1185 and the notification in the Official Journal 2017 / C 076/02 of the European Commission.

Manufacturer	Lotus Heating Systems A/S, Agertoften 6, 5550 Langeskov, Denmark +45 63237070
Product type	Room heater for solid fuel (wood logs only)
Model identifier	Lotus H570T
Documentation	www.lotusstoves.com
Requests	EN 13229 2001/A2 2004/AC 2007

EU Union legislation:

	Reference	Date	Title
Top level directives and regulations			
	DIR 2009/125/EC	21/10/2009	Energy Related Products Directive (ecodesign)
	REG (EU) 305/2011	9/3/2011	Construction Products Regulation (CPR)
	REG (EU) 2017/1369	4/7/2017	Energy Labelling Regulation
Implementation measures incl regulations and delegated acts			
	(EU) 2015/1186 (EL)	24/4/2015	Energy labelling delegated act on Room heaters
	(EU) 2015/1185 (ED)	24/4/2015	Ecodesign regulation on Room heaters
	2017/C 076/02	10/3/2017	COM Transitional methods OJ EU C76 Vol 60
Harmonised standards, other standards and technical specifications			
	EN 13240:2001	7/4/2001	Room heaters fired by solid fuel
	EN 13240/A2:2004	28/10/2004	Harmonisation of EN13240 by Annex ZA
	prEN 16510-1 (2013 ed)	January 2013	Emission measurement methods prior to 2018
	CEN/TS 15883	8/9/2009	Emission measurement from 2009
	EN 16510-1:2018	31/7/2018	Emission measurement methods 2018 onwards

Limit values:

This manufacturer declares the present room heater is in compliance with the limit values of the EU regulations.

η_s [%] Seasonal Heating efficiency	CO [mg/m^3] (13% O_2)	PM [mg/m^3] (13% O_2)	NOx [mg/m^3] (13% O_2)	C_{OGC} [mg/m^3] (13% O_2)
≥65%	≤1500	≤40	≤200	≤120

Date: 31/1-2024

Lars U. Borch, **Lotus Heating Systems A/S**

H570W

Technical data					Safety distances to flammables			
Type	Height mm	Width mm	Depth mm	Weight kg	A mm	B mm	C mm	Front mm
H570W	575	1017	440	154	250	350	300	1400

Chimney calculation form

Type	Smoke draft PA	Flue gas mass flow (g/s)	Flue gas Temperature	Efficiency %	Nominal power output kW
H570W	12	6,8	315°	80,5	7

Amount of ignition and refuelling	
Kindling firewood	Wood
2kg	1.5-2.5kg

Setting the air damper

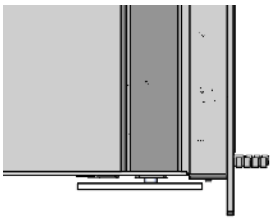

Other data

Supplier or brand name	*Lotus*	Notes
Model identity	***H570W***	
Energy efficiency class	***A+***	
Direct heat output	***7 kW***	*rated power at EN test*
Energy Efficiency Index (EEI)	***107,7***	*Calculation with EEI calculator²*
Efficiency at nominal heat output	***80,5 %***	*Efficiency when tested according to EN 13229*
Specific precautions to be taken when assembling, installing or maintaining the local space heater product.	**Selected examples:** *- Fire protection and safety distances, such as distances to combustible materials, must be observed!* *- An adequate supply of combustion air to the fireplace must be guaranteed.*	

H570W ecoline

Technical data					Safety distances to flammables			
Type	**Height mm**	**Width mm**	**Depth mm**	**Weight kg**	**A mm**	**B mm**	**C mm**	**Front mm**
H570W ecoline	575	1017	440	154	250	350	300	1400

Chimney calculation form

Type	Smoke draft PA	Flue gas mass flow (g/s)	Flue gas Temperature	Efficiency %	Nominal power output kW
H570W ecoline	12	4,4	191°	86	7

Optimal firing schedule

H570 ecoline	Ignition	Pre-firing	Pre-firing	Firing	Firing	Firing
Firewood in kg.	3,2	2,47	1,77	1,32	1,28	And so on.
Damper setting	100% open (55mm)	40 mm after 1:30 min	26 mm after 1:30 min	23 mm after 1:30	23 mm from start	And so on.
Tree position and length	20 cm	25 cm	25 cm	22 cm	22 cm	

Air damper setting

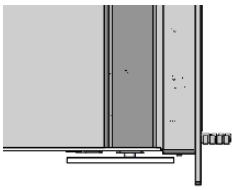

- **+**

Other data

Supplier or brand name	***Lotus***	**Notes**
Model identity	***H570 ecoline***	
Energy efficiency class	***A+***	
Direct heat output	***5.6 kW***	*rated power at EN test*
Energy Efficiency Index (EEI)	***115,7***	*Calculation with EEI calculator[2]*
Efficiency at nominal heat output	***86 %***	*Efficiency when tested according to EN 13229*
Specific precautions to be taken when assembling, installing or maintaining the local space heater product.	**Selected examples:** *- Fire protection and safety distances, such as distances to combustible materials, must be observed!* *- An adequate supply of combustion air to the fireplace must be guaranteed.*	

Declaration of conformity

This manufacturer's declaration confirms the compliance with the requirements of Regulation (EU) 2015/1185 and the notification in the Official Journal 2017 / C 076/02 of the European Commission.

Manufacturer	Lotus Heating Systems A/S, Agertoften 6, 5550 Langeskov, Denmark +45 63237070
Product type	Room heater for solid fuel (wood logs only)
Model identifier	Lotus H570W
Documentation	www.lotusstoves.com
Requirements	EN 13229 2001/A2 2004/AC 2007

EU Union legislation:

	Reference	Date	Title
Top level directives and regulations			
	DIR 2009/125/EC	21/10/2009	Energy Related Products Directive (ecodesign)
	REG (EU) 305/2011	9/3/2011	Construction Products Regulation (CPR)
	REG (EU) 2017/1369	4/7/2017	Energy Labelling Regulation
Implementation measures incl regulations and delegated acts			
	(EU) 2015/1186 (EL)	24/4/2015	Energy labelling delegated act on Room heaters
	(EU) 2015/1185 (ED)	24/4/2015	Ecodesign regulation on Room heaters
	2017/C 076/02	10/3/2017	COM Transitional methods OJ EU C76 Vol 60
Harmonised standards, other standards and technical specifications			
	EN 13240:2001	7/4/2001	Room heaters fired by solid fuel
	EN 13240/A2:2004	28/10/2004	Harmonisation of EN13240 by Annex ZA
	prEN 16510-1 (2013 ed)	January 2013	Emission measurement methods prior to 2018
	CEN/TS 15883	8/9/2009	Emission measurement from 2009
	EN 16510-1:2018	31/7/2018	Emission measurement methods 2018 onwards

Limit values:

This manufacturer declares the present room heater is in compliance with the limit values of the EU regulations.

η_s [%] Seasonal Heating efficiency	CO [mg/m^3] (13% O_2)	PM [mg/m^3] (13% O_2)	NOx [mg/m^3] (13% O_2)	C_{OGC} [mg/m^3] (13% O_2)
≥65%	≤1500	≤40	≤200	≤120

Date: 31/1-2024

Lars U. Borch, **Lotus Heating Systems A/S**

H700

Technical data					Safety distances to flammables			
Type	Height mm	Width mm	Depth mm	Weight kg	A mm	B mm	C mm	Front mm
H700	705	450	440	96	300	400	250	1100

Chimney calculation form

Type	Smoke draft PA	Flue gas mass flow (g/s)	Flue gas Temperature	Efficiency %	Nominal power output kW
H700	12	5,7	308°	82,9°	6

Amount of ignition and refuelling	
Kindling firewood	Wood
2kg	1.5-2.5kg

Setting the air damper

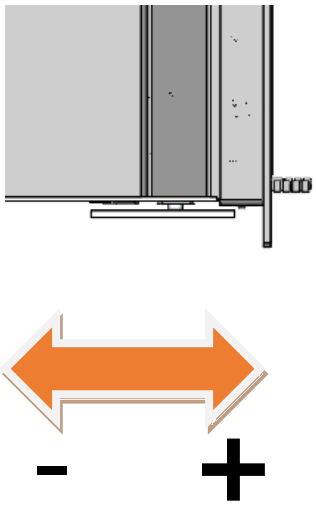

Other data

Supplier or brand name	*Lotus*	Notes
Model identity	**H700**	
Energy efficiency class	**A+**	
Direct heat output	**6 kW**	*rated power at EN test*
Energy Efficiency Index (EEI)	**111,2**	*Calculation with EEI calculator²*
Efficiency at nominal heat output	**82,9%**	*Efficiency according to EN 13229*
Specific precautions to be taken when assembling, installing or maintaining the local space heater product.	*Selected examples:* *- Fire protection and safety distances, such as distances to combustible materials, must be observed!* *- An adequate supply of combustion air to the fireplace must be guaranteed.*	

Declaration of conformity

This manufacturer's declaration confirms the compliance with the requirements of Regulation (EU) 2015/1185 and the notification in the Official Journal 2017 / C 076/02 of the European Commission.

Manufacturer	Lotus Heating Systems A/S, Agertoften 6, 5550 Langeskov, Denmark +45 63237070
Product type	Room heater for solid fuel (wood logs only)
Model identifier	Lotus H700
Documentation	www.lotusstoves.com
Requests	EN 13229 2001/A2 2004/AC 2007

EU Union legislation:

	Reference	Date	Title
Top level directives and regulations			
	DIR 2009/125/EC	21/10/2009	Energy Related Products Directive (ecodesign)
	REG (EU) 305/2011	9/3/2011	Construction Products Regulation (CPR)
	REG (EU) 2017/1369	4/7/2017	Energy Labelling Regulation
Implementation measures incl regulations and delegated acts			
	(EU) 2015/1186 (EL)	24/4/2015	Energy labelling delegated act on Room heaters
	(EU) 2015/1185 (ED)	24/4/2015	Ecodesign regulation on Room heaters
	2017/C 076/02	10/3/2017	COM Transitional methods OJ EU C76 Vol 60
Harmonised standards, other standards and technical specifications			
	EN 13240:2001	7/4/2001	Room heaters fired by solid fuel
	EN 13240/A2:2004	28/10/2004	Harmonisation of EN13240 by Annex ZA
	prEN 16510-1 (2013 ed)	January 2013	Emission measurement methods prior to 2018
	CEN/TS 15883	8/9/2009	Emission measurement from 2009
	EN 16510-1:2018	31/7/2018	Emission measurement methods 2018 onwards

Limit values:

This manufacturer declares the present room heater is in compliance with the limit values of the EU regulations.

η_s [%] Seasonal Heating efficiency	CO [mg/m^3] (13% O_2)	PM [mg/m^3] (13% O_2)	NOx [mg/m^3] (13% O_2)	C_{OGC} [mg/m^3] (13% O_2)
≥65%	≤1500	≤40	≤200	≤120

Date: 31/1-2024

Lars U. Borch, **Lotus Heating Systems A/S**

Unico

Technical data					Safety distances to flammables			
Type	Height mm	Width mm	Depth mm	Weight kg	A mm	B mm	C mm	Front mm
Unico 11-12	545	716	486	122	0	80/0	300	1200
Unico 13	545	705	486	122	0	80/80	300	1200

Chimney calculation form

Type	Smoke draft PA	Flue gas mass flow (g/s)	Flue gas Temperature	Efficiency %	Nominal power output kW
Unico 11-12-13	12	5,1	358°	80	6

firing schedule

Amount of ignition and refuelling	
Kindling firewood	Wood
2kg	1.8kg

Setting the air damper

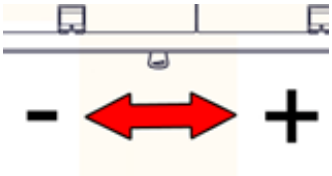

Supplier or brand name	***Lotus***	**Notes**
Model identity	***Unico series***	
Energy efficiency class	***A+***	
Direct heat output	***6 kW***	*rated power at EN test*
Energy Efficiency Index (EEI)	***107***	*Calculation with EEI calculator²*
Efficiency at nominal heat output	***80 %***	*Efficiency according to EN 13229*
Specific precautions to be taken when assembling, installing or maintaining the local space heater product.	*Selected examples:* *- Fire protection and safety distances, such as distances to combustible materials, must be observed!* *- An adequate supply of combustion air to the fireplace must be guaranteed.*	

Declaration of conformity

This manufacturer's declaration confirms the compliance with the requirements of Regulation (EU) 2015/1185 and the notification in the Official Journal 2017 / C 076/02 of the European Commission.

Manufacturer	Lotus Heating Systems A/S, Agertoften 6, 5550 Langeskov, Denmark +45 63237070
Product type	Room heater for solid fuel (wood logs only)
Model identifier	Lotus Unico series
Documentation	www.lotusstoves.com
Requests	EN 13229 2001/A2 2004/AC 2007

EU Union legislation:

	Reference	Date	Title
Top level directives and regulations			
	DIR 2009/125/EC	21/10/2009	Energy Related Products Directive (ecodesign)
	REG (EU) 305/2011	9/3/2011	Construction Products Regulation (CPR)
	REG (EU) 2017/1369	4/7/2017	Energy Labelling Regulation
Implementation measures incl regulations and delegated acts			
	(EU) 2015/1186 (EL)	24/4/2015	Energy labelling delegated act on Room heaters
	(EU) 2015/1185 (ED)	24/4/2015	Ecodesign regulation on Room heaters
	2017/C 076/02	10/3/2017	COM Transitional methods OJ EU C76 Vol 60
Harmonised standards, other standards and technical specifications			
	EN 13240:2001	7/4/2001	Room heaters fired by solid fuel
	EN 13240/A2:2004	28/10/2004	Harmonisation of EN13240 by Annex ZA
	prEN 16510-1 (2013 ed)	January 2013	Emission measurement methods prior to 2018
	CEN/TS 15883	8/9/2009	Emission measurement from 2009
	EN 16510-1:2018	31/7/2018	Emission measurement methods 2018 onwards

Limit values:

This manufacturer declares the present room heater is in compliance with the limit values of the EU regulations.

η_s [%] Seasonal Heating efficiency	CO [mg/m^3] (13% O_2)	PM [mg/m^3] (13% O_2)	NOx [mg/m^3] (13% O_2)	C_{OGC} [mg/m^3] (13% O_2)
≥65%	≤1500	≤40	≤200	≤120

Date: 31/01-2024

Lars U. Borch, **Lotus Heating Systems A/S**

WARRANTY CERTIFICATE
Lotus Woodburning stove - 10 year warranty

From 1 September 2014, Lotus offers a 10-year warranty instead of 5 years. This warranty applies to ovens delivered from Lotus after this date.

This warranty certificate covers Lotus stove model _____ with production number _____ purchased on _____.

The warranty covers normal firing, i.e. with ordinary split wood and pressed wood briquettes, and only if the stove is operated according to the instructions in the user manual.

The warranty covers the flawless operation of the stove and does not cover overheating damage, damage to paint, wearing parts and moving parts such as glass, shamol, stone, shaker grate, smoke deflector plates, gaskets, sliding dampers and closing devices.

The warranty is void if the stove is not operated in accordance with the operating instructions and if defects or similar are sought/repaired by a person not authorised by Lotus Heating Systems A/S. The warranty does not cover any damage caused by inappropriate, unauthorised use of the stove.

If a product is returned to Lotus Heating Systems A/S and it subsequently turns out that the damage is not covered by the warranty, the costs incurred shall be borne by the customer.

In the event of a warranty repair, the warranty period for the performed repair is not extended, but continues to follow the original warranty period.

This warranty certificate is only valid when completed and accompanied by the original invoice from the dealer. The warranty period follows the date of the invoice.

We wish them the best of luck with their new Lotus stove.

Sincerely yours

Dealer:

Lars U. Borch, **Lotus Heating Systems A/S**

Table 1

Model identifier: *
Indirect heating function: N.A
Direct heat output: * kW

Local heating emissions at nominal heat output	Emissions from local heating at minimal rated heat output
[x] mg/Nm³ (13%O2)	[x] mg/Nm³ (13%O2)

Fuel	Preferred fuel	Other suitable fuel(s)	ηs [x%]:	PM	OGC	CO	NOX	PM	OGC	CO	NOX
Wood logs, moisture content ≤ 25 %	yes	No	*	*	*	*	*	NA	NA	NA	NA
Compressed wood, moisture content < 12 % (e.g. according to ISO 17225-3	No	No									
Other woody biomass	No	No									
Non-woody biomass	No	No									
Anthracite and dry steam coal	No	No									
Hard coke	No	No									
Low temperature coke	No	No									
Bituminous coal	No	No									
Lignite briquettes	No	No									
Peat briquettes	No	No									
Blended fossil fuel briquettes	No	No									
Other fossil fuel	No	No									
Blended biomass and fossil fuel briquettes	No	No									
Other blend of biomass and solid fuel	No	No									

Heat output	Symbol	Value	Unit
Nominal heat output	P name	*	kW
Minimum heat output	P min	N.A.	kW
Auxiliary power consumption			
At nominal heat output	max power	N.A.	kW
At minimum heat output	el min	N.A.	kW
In standby mode	Electricity SB	N.A.	kW

Fuel efficiency (Based on the net calorific value (NCV)	Symbol	Value	Unit
Fuel efficiency at nominal heat output	ηth,nom	*	%
Fuel efficiency at minimum heat output	ηth,min	N.A.	%
Permanent pilot flame power requirement			
Pilot flame power requirement (if applicable)	Ppilot	N.A.	kW

Type of heat output/room temperature control

Single-stage heat output, no room temperature control	No
two or more manual stages, no room temperature control	Yes
with mechanic thermostat room temperature control	No
with electronic room temperature control	No
with electronic room temperature control plus day timer	No

with electronic room temperature control plus week timer	No

Other control options

room temperature control, with presence detectors	No
room temperature control, with open window detection	No
with distance control option	No

*See Declaration of conformity and technical data for the stove